PHASE I ENVIRONMENTAL SITE ASSESSMENT
VACANT LAND
SWC OF 40TH STREET AND MCDOWELL ROAD
PHOENIX, ARIZONA

DRAFT

V3 Companies of Arizona
Attention: Mr. Greg Wolterstorff
1048 North 44th Street, Suite 100
Phoenix, Arizona 85008

Project No. 02-0021B.R01A

Environmental • Geotechnical • Chemical • Materials Testing

2801 South 35th Street, Phoenix, AZ 85034
ph 602.393.4800 • info@gecaz.com • www.gecaz.com • 602.393.4801 fax

PHASE I ENVIRONMENTAL SITE ASSESSMENT
VACANT LAND
SWC OF 40TH STREET AND MCDOWELL ROAD
PHOENIX, ARIZONA

Prepared for:

V3 Companies of Arizona
Attention: Mr. Greg Wolterstorff
1048 North 44th Street, Suite 100
Phoenix, Arizona 85008

Prepared by:

GEC
2801 South 35th Street
Phoenix, Arizona 85034
(602) 393-4800

Project No. 02-0021B.R01A

January 29, 2007

By: **DRAFT** And by: Chet L Pearson

Phyllis S. Rettke, R.G. Chet L. Pearson, P.E.

Draft Copies to: Addressee (2)

EXECUTIVE SUMMARY

EXECUTIVE SUMMARY

This report presents data for the Phase I Environmental Site Assessment (ESA) of approximately 84.25 acres of vacant land located at the southwest corner of 40th Street and McDowell Road in Phoenix, Arizona (Site). This assessment was conducted on behalf of V3 Companies of Arizona. Information obtained for this report has been used to evaluate the Site for the presence of recognized environmental conditions resulting from past or present uses. Our scope of services included a Site reconnaissance, a review of the environmental setting, a review of Site ownership and history, a review of a previous environmental assessment completed by GEC at the Site, evaluation of the data, and preparation of this report. Business risks, vapor intrusion, and other non-scope issues as defined in ASTM E1527-05 were not investigated as part of this Phase I ESA.

The Site is irregular in shape and totals approximately 84.25 acres. At the time of our reconnaissance, the Site was vacant land. However, the southeastern portion of the Site was previously developed with the Arizona State Hospital Farm from at least 1917 until the mid-1960s. The farm included dairy and poultry operations and agricultural fields. Based on our review, several issues were identified at the Site which require additional assessment. We believe a Phase II ESA is required before an informed opinion can be made concerning the environmental condition at the Site. The Phase II ESA should include a geophysical survey, exploratory excavations, soil sampling and testing, and evaluation of the data.

The Site was vacant graded and fallow agricultural land. We observed numerous remnants of the previous development in the southeastern portion of the Site. We observed dumped piles of construction and demolition debris, landscape debris, soil and trash in various areas of the Site. We observed several squatters' camps on the Site. We observed a groundwater monitoring well on the Site. This well is currently being monitored by the Arizona Department of Water Resources (ADWR) for groundwater level and temperature. We did not observe surficial indications of underground storage tanks, above-ground storage tanks, trash pits, seepage pits, borrow pits, or other potential point sources of contamination on the Site during our recent Site reconnaissance.

Based on our review, the southeastern portion of the Site was developed with the Arizona State Hospital Farm. The farm operated at the Site from at least 1917 until the mid-1960s. The farm included dairy and poultry operations and agricultural fields. The farm was developed with about 20 to 30 structures including several residences, large barns, sheds, and several smaller ancillary structures. Historical reports indicate fuels, lubricants, insecticides, and pesticides were used in the operations at the farm. However, we were not able to find detailed information regarding exact features or operations at the Site. Based on our experience with typical dairy farm operations, it is likely that agricultural chemicals were stored and used at the facility, and farm equipment was fueled and maintained at the facility. Depending on past storage, handling, and waste disposition practices, these activities may have caused contamination at the Site. In addition, it is likely that silage pits, trash and/or burn pits have been associated with the historical operations. We recommend that a metal detection survey, exploratory excavations, and soil sampling and testing be performed in this area to evaluate these matters.

GEC © 2007

Several residential dwellings were located on the Site as early as the 1940s through the mid-1960s. Septic systems were probably associated with each of these previous developments at the Site. Based on our experience, residential septic systems used only for the disposal of domestic wastewater generally do not represent a significant cleanup liability. However, since the farm operations at the Site included the use of hazardous materials, these materials may have been disposed into septic systems in the former farm development area. If septic systems are identified near the former farm operations, we recommend the soils around the septic systems be sampled and tested for potential impacts.

Based on our review, two groundwater wells are registered for the Site. We did not identify one of these wells during our reconnaissance; however, we did identify a concrete feature near the identified location of the well. In addition, there may have been domestic groundwater wells on the Site in the past. Groundwater wells at the Site should be capped and/or abandoned according to ADWR guidelines.

The historic agricultural usage of the Site may have included the application of agricultural chemicals such as pesticides and herbicides. Residues of these chemicals could still be present in the natural surficial soils. These types of residues are very common in existing and former agricultural areas throughout the State. We previously performed a limited program of soil sampling and testing at the Site. The pesticide 4,4'-DDD was detected at concentrations ranging between 0.034 and 0.053 mg/kg, well below the current residential soil remediation level (SRL) of 13 mg/kg. No other pesticides or herbicides were detected above laboratory reporting limits in the composite samples. However, if the Site will be residentially developed, we recommend additional pesticide screening across the former farm field areas on the Site.

Our Phase I ESA included a review of pertinent regulatory records readily available from local, State, and Federal sources and databases. The Site address was not identified in our records review, and no facilities were identified in the immediate Site vicinity that would indicate the presence of recognized environmental conditions at the Site, with the possible exception of the Motorola 52nd Street Superfund Site as discussed in the text of this report.

The information summarized in this report is not sufficient to guarantee the absence of recognized environmental conditions at the Site. We did not observe indications of hazardous or petroleum substances at the Site; however, based on our review, the Site was previously developed with the Arizona State Hospital Farm. We believe this former usage of the Site represents a recognized environmental condition, and we recommend additional assessment of the Site as follows:

- Pesticide and herbicide screening of any future residential areas.
- A Phase II investigation of the former farm development area including a geophysical survey to locate buried metallic objects, septic systems, the capped well, any trash pits, any silage pits, and other suspect materials; exploratory excavations in suspect areas identified by the geophysical survey and around the former development areas; and sampling and testing of surface and subsurface soils on the Site.

GEC © 2007

TABLE OF CONTENTS

TABLE OF CONTENTS

1. INTRODUCTION 1

2. SITE INFORMATION 3
   2.1 Site Location and Zoning 3
   2.2 Site Description 3
   2.3 Site Vicinity 5

3. ENVIRONMENTAL SETTING 6
   3.1 Geology and Hydrogeology 6
   3.2 Environmental FirstSearch 7
   3.3 CERCLA Facilities 7
   3.4 WQARF Facilities 10
   3.5 RCRA Facilities 11
   3.6 Underground Storage Tank Facilities 12
   3.7 Solid Waste Facilities 13
   3.8 ERNS/Hazardous Materials Incident Logs 13
   3.9 Drywells 14
   3.10 Arizona Voluntary Remediation Program Project Status List 14
   3.11 Brownfields Program List 15
   3.12 Institutional and Engineering Control Registries 15
   3.13 Tribal Lands 16
   3.14 Unmapped Facilities 16

4. HISTORICAL LAND USE 17
   4.1 General 17
   4.2 Site Ownership 17
   4.3 Aerial Photographs 18
   4.4 Map Review 20
   4.5 City Directories 20
   4.6 Site Development Records 21
   4.7 Fire Records 22
   4.8 Interviews 22
   4.9 Previous Environmental Reports 23
   4.10 Special Historical Issues 25
   4.11 Site History 25

5. CONCLUSIONS 28

6. LIMITATIONS 29

7. REFERENCES 30

GEC © 2007

FIGURES

Figure 1. Site Location Map

Figure 2. Maricopa County Assessor's Map

Figure 3. Site Plan

Figure 4. Groundwater Contour Map

APPENDIX A

Site Photographs

APPENDIX B

City of Phoenix Zoning Map

APPENDIX C

ADWR Registered Wells

APPENDIX D

Environmental FirstSearch Report

APPENDIX E

Contact Log

APPENDIX F

Chain-of-Ownership Report

APPENDIX G

User Questionnaire

GEC © 2007

REPORT

1. INTRODUCTION

Geotechnical and Environmental Consultants, Inc. (doing business as GEC) was recently retained by V3 Companies of Arizona to conduct a Phase I Environmental Site Assessment (ESA) on approximately 84.25 acres of vacant land located at the southwest corner of 40th Street and McDowell Road in Phoenix, Arizona (Site), as shown on Figure 1.

In 2002, GEC performed a Phase I ESA on a larger area that included the Site. Our report was titled *Phase I Environmental Site Assessment, Mashburn's TSA Multipurpose Facility, SW of 40th Street and McDowell Road, Phoenix, Arizona* dated February 14, 2002 (Ref. 1). This previous report is summarized in Section 4.9. Information from the previous report was also used for this assessment.

The objective of this Phase I ESA was to obtain data to aid in evaluating the Site for the presence of recognized environmental conditions resulting from past or present uses, as defined by ASTM E1527-05 and as described in our Phase I ESA proposal (GEC Proposal No. P06-1010.P01), dated November 8, 2006. The services performed for this assessment included a Site reconnaissance to develop a description of the Site and current Site usage; a review of the physical setting of the Site and regulatory agency listings for the Site and vicinity; a review of the Site ownership and history; a review of the previous environmental reports on the Site; and preparation of this report. Business risks, vapor intrusion, and other non-scope issues as defined in ASTM E1527-05 were not investigated as part of this Phase I ESA.

GEC personnel involved in the preparation of this report have Phase I ESA experience and are supervised by senior-level personnel with extensive experience in conducting Phase I ESAs. Chet L. Pearson, P.E. and Phyllis S. Rettke, R.G. are qualified Environmental Professionals as defined by ASTM E1527-05. Mr. Pearson, a GEC Principal, provided overall supervision and review of this Phase I ESA. Ms. Rettke, a GEC Project Geologist, conducted the Site reconnaissance and research, and she was the report writer. We, Chet L. Pearson and Phyllis S. Rettke, declare that, to the best of our professional knowledge and belief, we meet the definition of *Environmental Professionals* as defined in §312.10 of 40 CFR 312, and we have specific qualifications based on education, training, and experience to assess a property of the nature, history, and setting of the Site. The Phase I ESA services were performed in general agreement with applicable sections of ASTM E1527-05 for all appropriate inquiries. Business risks, vapor intrusion, and other non-scope issues as defined in ASTM E1527-05 were not investigated as part of this Phase I ESA, unless previously specified.

The emphasis of this Phase I ESA was to identify uses of the Site that might indicate the presence of recognized environmental conditions. A recognized environmental condition is defined in ASTM E1527-05 as "the presence or likely presence of any hazardous substances or petroleum products on a [site] under conditions that indicate an existing release, past release, or a material threat of a release of any hazardous substances or petroleum products into structures on the [site] or into ground, ground water, or surface water of the [site]. The term includes hazardous substances or petroleum products even under conditions in compliance with laws. The term is not

intended to include de minimus conditions that generally do not represent a material risk of harm to public health or the environment and that generally would not be the subject of an enforcement action if brought to the attention of appropriate governmental agencies." We believe ASTM's definition of a recognized environmental condition is vague and subject to interpretation; therefore, we have used our experience and judgement to identify those conditions we believe are significant in this report.

Information concerning the Site and vicinity was obtained by GEC from a number of agencies, published documents, and interviews with individuals familiar with the Site and its history. As part of our quality control procedures, we try to independently verify information obtained. However, we cannot always obtain independent verification. GEC is not responsible for the accuracy of information provided to us by others.

GEC © 2007

2. SITE INFORMATION

2.1 Site Location and Zoning

The Site is located in the northeast quarter of Section 1, Township 1 North, Range 3 East of the Gila and Salt River Baseline and Meridian in Phoenix, Arizona, as shown on Figure 1. The Site is identified by the Maricopa County Assessor's Office as Parcel 001B on Map 01 of Book 121 with a physical address of 3705 East McDowell Road, as shown on Figure 2.

According to the City of Phoenix Planning Department website, the Site has been subdivided into several tracts with different assigned zoning for each of the tracts as presented in Appendix B. The assigned zoning for the Site is single family residential for the southwest corner of the Site, commercial for the northeast and southeast corners with the remainder as multi-family housing.

2.2 Site Description

Our Site reconnaissance was conducted on January 10, 2007, by Phyllis S. Rettke, R.G. and Andrea Goldfarb of GEC. Our identification of the Site boundaries was based on the Maricopa County Assessor's map, maps from previous reports, and observations made during our Site reconnaissance. We were able to identify the Site boundaries in the field based on the Site plan, the presence of roadways, and perimeter fencing that surround the Site. Selected photographs of the Site taken during our reconnaissance are presented in Appendix A. A Site plan is provided on the 2006 Maricopa County Assessor's aerial photograph and is attached as Figure 3.

The Site is a portion of Parcel 121-01-001B, is irregular in shape, and totals approximately 84.25 acres in size. In general, the northern portion of the Site appeared to be former agricultural farm land, the southern portion of the Site contained various remnants of previous development, and the southwestern portion of the Site contained a large retention basin for the adjacent freeway.

The northern portion of the Site located along McDowell Road was Site was relatively flat vacant land. A chain-link fence crossed this portion of the Site in a general east to west direction. We observed dumped piles of construction and demolition debris, landscape debris, soil, and trash in this portion of the Site, along the Site border with 38th Street, and along the chain-link fence. None of this debris appeared to extend below the ground surface. We did not observe indications of hazardous or petroleum substances on or in these piles. An earthen irrigation canal was located in the central portion of the Site in a north to south orientation from just south of the sidewalk along McDowell Road extending south of the chain-link fence approximately 2/3 of the length of the Site. Two large empty dumpsters were located on the Site near McDowell Road.

The southern 3/4 of the Site was fenced to prevent trespassing. The gates on the east to west trending fence have been removed allowing vehicular access to the Site. Large holes have been cut into the chain-link fence along 40th and 36th Streets that enable foot traffic on the Site. We observed several squatter's camps within the eastern half of the fenced area. One of the camps appeared to be active, with a dog protecting a tent in the area. The other camps seemed to be a

collection of grocery store shopping carts, scrap wood, and other objects surrounding large bushes or trees. We viewed these areas from a safe distance. None of the camps appeared to be occupied during our reconnaissance.

We observed numerous remnants of foundations and concrete slabs located in the southeastern portion of the Site. Based on our previous historical investigation, the southeastern portion of the Site contained the Arizona State Hospital Farm structures in the past. Some of the foundations correspond to buildings observed in our aerial photograph review. However, we observed many more foundations/slabs than buildings observed on the aerial photographs. Some of the concrete slabs were small and may have been associated with small outbuildings or canopy structures.

We observed a monitoring well located in the approximate location of a well described in our previous Phase I ESA. During our previous reconnaissance of the Site, we observed a well with a locked steel casing elevated above a rectangular concrete slab. This well was apparently modified as part of the Motorola 52nd Street Superfund Site monitoring well network. The well currently had a white locked box covering the well and a pole with an antenna and a solar panel (See Photo 6). A phone number was painted on the side of the box. We contacted the Arizona Department of Water Resources (ADWR) concerning the use of this well. According to a hydrologist for ADWR, the well is currently part of a satellite-linked transducer groundwater monitoring system for the Phoenix Active Management Area (AMA). ADWR only monitors groundwater elevation, temperature, and depth, and this well is no longer a part of the groundwater well network for the Motorola 52nd Street Superfund Site groundwater monitoring.

The southwestern part of the Site contained an irregularly- shaped fenced retention feature for the adjacent Red Mountain Loop 202 Highway. We reviewed the file summary for the Site at the Arizona State Land Department (ASLD) and requested the file for the retention basin easement to review. The ASLD did not have these files available to review. We requested that the staff continue to search for these files. At the date of this report, the file has not been found. At the time of the reconnaissance, we could only observe this feature from the exterior of the perimeter fence. The retention basin was dry during our reconnaissance. We observed a large culvert in the southwest corner of the retention basin. It appeared that a squatter was living in and around the culvert. We did not observe stained soils in the retention basin area.

During our reconnaissance, we did not observe surficial indications of underground storage tanks (USTs), above-ground storage tanks (ASTs), trash pits, seepage pits, borrow pits, or other potential point sources of contamination on the Site.

There are currently no utility connections to the Site. The City of Phoenix provides potable water and waste water services to the Site vicinity. During our Site reconnaissance, we observed two City of Phoenix sanitary sewer manholes south of the block wall between the southern boundary of the adjacent apartment complex and the fenced ADOT retention feature. Based on our review of the City of Phoenix sewer map, a City sewer line crosses that portion of the Site to the south from the adjacent apartment complex. Southwest Gas provides gas service, and the Salt River Project (SRP) provides electric service to the Site vicinity.

2.3 Site Vicinity

The Site is situated in an area of Phoenix that has been developed with residential and commercial development. The northern and eastern portions of the Site are bounded by McDowell Road to the north; 40th Street to the east; a chain-link fence, followed by a drainage canal and the Red Mountain Loop 202 Highway to the south. The Loop 202 Highway extends along the entire southern border of the Site. Additional vacant land owned by the State was located south of the freeway. The Site was bordered by 36th Street in the southern portion of the Site; a block wall marking the southern and eastern boundaries of apartment complexes to the north of the western portion of the Site; and the remainder of the block wall followed by 38th Street. Apartment and condominium complexes were located in the northwest exclusion to the Site.

Development in the immediate vicinity of the Site was primarily older residential apartments, subdivisions, and single family homes with a few exceptions. Commercial development was located at the northwest corner of 40th Street and McDowell Road included a Quick Stop Food Mart, ATC Office Systems, Diamond Shamrock gas/service station.

Based on our observations of the adjacent properties, we did not observe any indications of potential impacts to the Site from these properties. Therefore, we did not identify any recognized environmental conditions at the Site resulting from the adjacent properties.

GEC © 2007

3. ENVIRONMENTAL SETTING

3.1 Geology and Hydrogeology

The Site is situated on relatively flat land within the western portion of the East Salt River Sub-Basin of the Salt River Valley hydrologic area. The Salt River Valley is also known as the Phoenix Active Management Area (AMA) or Phoenix Basin. The Phoenix Basin is located in the Basin and Range Province which includes the southern and western portions of Arizona. The Basin and Range Province is characterized by elongated mountain ranges trending northwest-southeast that are separated by broad alluvial valleys. The mountains in this Province consist of tilted blocks of Precambrian, Paleozoic, Mesozoic, and Cenozoic rocks that are bounded by faults and are usually severely eroded (Refs. 2, 3 and 4).

In general, the Phoenix Basin is an extensive basin containing alluvial soils often over 1,500 feet thick, with numerous small mountains which divide the Phoenix basin into five sub-basins (Ref. 4). In the south-central area of the East Salt River Sub-Basin, the alluvium has been estimated to be as thick as 11,000 feet. The alluvial soils found in the sub-basin are highly variable and range from dense sand, gravel, and cobbles to silts and clays. In many areas, deposits of heavily cemented sandy clay and clayey sand ("caliche") are encountered, often having the characteristics of soft rock. The alluvial soils are typically divided into three units based on lithographic changes. The Upper Alluvial Unit (UAU) generally consists of fine-grained sand and silt with some clay interbedded with coarse-grained deposits of sand, gravel, and cobbles extending as deep as 300 feet. This unit is underlain by the Middle Alluvial Unit (MAU) which is composed primarily of silts, sands, and gravel. This unit varies in thickness from less than 100 feet to 1,000 feet. The deepest unit is called the Lower Alluvial Unit (LAU). This unit, which varies in thickness from 600 feet to over 10,000 feet, contains clays, silts, sands, gravel, and evaporates (Ref. 2, 3 and 4).

The principal drainage feature through the Phoenix Basin is the Salt River, which drains westerly and is located approximately 2 miles south of the Site. The Salt River is also the nearest significant natural drainage feature to the Site. The Salt River is usually dry through the greater Phoenix metropolitan area due to numerous flood control/water retention structures upstream. However, water does occasionally flow in the Salt River after heavy rain and/or water releases from the upstream structures. Surface runoff in the Site vicinity generally flows southwest.

The primary source of groundwater in the East Salt River Sub-Basin is the alluvial soils between the mountain blocks. Groundwater in the East Salt River Sub-Basin is typically derived from the UAU and MAU and is usually unconfined. Groundwater data provided by ADWR by their online Statewide Hydrologic Monitoring Program for the monitoring well located on the Site indicated the depth to groundwater for January 2007 was approximately 68 feet below the ground surface (bgs). This depth is similar to the groundwater data provided by ADWR shown on Figure 4 (Ref. 3). The direction of groundwater flow beneath the Site is westerly based on the groundwater contours and individual well data shown on Figure 4. Various conditions, including nearby mountains blocks, areas of groundwater recharge, and areas of heavy pumping of groundwater can locally alter aquifer flow directions.

We searched the ADWR Wells 55 CD for information on wells in the northeast quarter of Township 1 North, Range 3 East, Section 1, which includes the Site and vicinity (Ref. 5). ADWR indicated there are three registered wells in the quarter section that contained the Site. One of the well registrations was for a geotechnical well completed in 2002 and abandoned at that time. The other two registrations were for two wells owned by the Arizona State Land Department. One of the wells was filled with soil and was sealed by having a steel plate welded to the top of the casing at a depth of 16 inches bgs. The second well was a water supply well that was converted to a monitoring well and monitored by Dames and Moore for the Motorola 52nd Street Superfund Site on-going assessment. It was not clear whether the monitoring well observed on the Site was the same well as listed in the report. Since we did not find any additional well documents for the on-site monitoring well, and we did not observe any other wells on the Site, we assume that they are the same well. The on-site monitoring well was currently only monitored for temperature and groundwater level by ADWR. A copy of the ADWR registered well list with the well documents for the ASLD wells are presented in Appendix B.

3.2 Environmental FirstSearch

We subcontracted TRACK-Info Services, LLC to prepare an Environmental FirstSearch Report (FirstSearch) on environmental data found in Federal and State records for the Site and properties in the vicinity of the Site. A copy of the report is presented in Appendix D. The publication date of each database FirstSearch checked is shown on the second page of the report. The distance radius used by FirstSearch for each data search is also shown on this page. Information regarding each facility identified in the database search is also presented in the FirstSearch report.

We have summarized pertinent data from the FirstSearch report in the following sections. Other data found in the FirstSearch report should be considered for informational purposes only and has not been closely reviewed by GEC. Where applicable, we also reference GEC's review of environmental databases for quality control purposes and for additional information.

3.3 CERCLA Facilities

The United States Environmental Protection Agency (EPA) investigates known or suspected uncontrolled or abandoned hazardous substance facilities under the Comprehensive Environmental Response, Compensation, and Liability Act (CERCLA). EPA maintains a comprehensive list of these facilities in a database known as the Comprehensive Environmental Response, Compensation and Liability Information System (CERCLIS). Facilities listed in the CERCLIS database may also be placed on the National Priorities List (NPL). The NPL identifies facilities with known contamination which are given priority for remedial action. An NPL facility is also known as a Federal "Superfund" facility. Facilities that were on the CERCLIS database, but where, following an initial investigation, no contamination was found, contamination was removed, or the contamination was not serious enough for NPL consideration, are called No Further Remedial Action Planned (NFRAP) facilities.

Under Section 105 of CERCLA, the EPA established a NPL of Superfund study areas and NPL Superfund facilities. Inclusion of a facility or study area on the NPL reflects a significant risk to

public health and the environment and indicates a Federal priority to remediate the facility or study area. This database, provided by the ADEQ, was searched by First Search to identify NPL facilities and study areas at the Site or within a 1-mile radius of the Site.

The Site was not identified as an NPL facility. However, First Search identified the Site as being within the boundaries of an NPL Superfund Study Area. FirstSearch used the EPA map from the initial listing on the NPL in 1989. It is EPA's policy that listing information including Study Area boundaries do not change over time. However, based upon our research of documents available on the ADEQ and EPA websites, the Site is located adjacent to the Motorola 52nd Street NPL Superfund Site as discussed below. Additionally, First Search identified the Garrett Turbine Engine Company at 111 South 34th Street approximately 0.78 mile southeast of the Site. This facility was investigated and is now part of the Motorola 52nd Street Superfund Site as discussed below.

The Motorola facility located at 52nd Street and McDowell Road had manufactured semiconductors and related components at a 90-acre facility. Chlorinated solvents were used in the production process. In 1983, Motorola tested several underground storage tanks (USTs) for leaks. Results showed 1 tank, containing volatile organic compounds (VOCs), was leaking. Further investigations determined groundwater and soil at the Motorola facility, as well as groundwater west of the Motorola facility, were contaminated with VOCs including the chlorinated solvent trichloroethene (TCE). Motorola also detected VOC contamination in monitoring wells at least 3 miles west of the Motorola facility. The manufacturing facility, Honeywell, located in the area of 34th Street and Air Lane had also contributed to this groundwater VOC contamination. Other facilities may also have contributed to the groundwater contamination.

Because of the size of the Motorola 52nd Street Superfund Site, ADEQ divided the study area into 3 units – Operable Unit 1 (OU1), Operable Unit 2 (OU2), and Operable Unit 3 (OU3).

OU1 – The boundaries of OU1 were 52nd Street on the east side, Palm Lane on the north, Roosevelt Street to the south, and 46th Street to the west. The western most boundary of OU1 was approximately 2 miles from the eastern boundary of the Site. OU1 contained groundwater treatment systems at the former Motorola property located at 52nd Street and McDowell Road. Motorola has been operating and maintaining this groundwater treatment system since 1992. In addition, Motorola was working to clean-up subsurface soils impacted by VOC contamination.

OU2 – The boundaries of OU2 were Roosevelt Street to the north, 46th Street to the east, Buckeye Road to the south, and 18th Street to the west. The Site was formerly located within OU2. A groundwater treatment system was completed at 20th Street and Washington Street in October 2001. Both Honeywell and Motorola were operating this treatment system under EPA oversight. Honeywell has also been conducting an investigation of soil and groundwater contamination at its facilities in the area of 34th Street and Air Lane.

OU3 – The boundaries of OU3 were McDowell Road to the north, 20th Street to the east, Buckeye Road to the south, and 7th Avenue to the west. The western boundary of the Site was

approximately two miles east of the westernmost boundaries of OU3. OU3 was classified as a study area, and the EPA was conducting an investigation to better define the boundaries of the groundwater VOC contamination. The boundaries of OU3 may change as more information becomes available. A total of 15 groundwater monitoring wells were installed in OU3 and EPA planned to install 13 more wells. In addition, the EPA will continue to collect information to identify additional facilities that may have contributed to the groundwater contamination in OU3.

We reviewed information provided by the Arizona Department of Environmental Quality (ADEQ) that summarized and updated activities on the Motorolla 52nd Street Superfund Site. According to the March 2003 plume map presented in the Environmental Bulletin (Ref. 6), the plume is no longer located beneath the Site. As discussed in Section 3.1, the ground water supply well on the Site was formerly part of the Motorola 52nd Street Superfund Site monitoring well network. The well was currently being monitored by ADWR as part of the Phoenix AMA monitoring system.

We reviewed information published by EPA concerning its migration policy about owners of property containing contaminated groundwater. Under CERCLA, 42 U.S.C. Section 107(a)(1), any person owning property which has been contaminated by migration through an aquifer faces uncertain liability as an "owner" even though the property owner did not handle or use any hazardous substances. EPA recognized that this uncertainty was having a negative impact for the development/redevelopment of non-contributory properties.

EPA issued a migration policy to address "ownership" concerns raised by owners, lenders, and prospective purchasers of such property where contamination from an off-Site source has migrated beneath the property in an aquifer. In summary, this policy states "where hazardous substances have come to be located on or in a property solely as the result of subsurface migration in an aquifer from a source or sources outside the property, EPA will not take enforcement action under CERCLA, 42 U.S.C. 106 and 107, against the owner of such property to require the performance of response actions or the payment of response costs." EPA further states "the intent of this policy is to lower the barriers to transfer of such property by reducing uncertainty regarding the possibility that EPA or third parties may take actions against these landowners."

In addition, we understand that State Water Quality Assurance Revolving Fund (WQARF) statutes (A.R.S. 49-283(E)) do not impose responsibility on land owners for groundwater contamination migrating beneath their land from an off-Site source. Therefore, based on our understanding of EPA's policy and State statutes, any owner, lender, or prospective purchaser of a property should not be held liable for any contamination that may be detected in the groundwater beneath the property which has migrated from an off-Site source.

GEC concluded the Motorola 52nd Street Superfund Site did not represent a recognized environmental condition at the Site. At the time of the reconnaissance, GEC observed no activities at the Site that may have contributed to the groundwater contamination. Also, as discussed in Section 5, no indications were found of historical activities at the Site that likely would have contributed to the groundwater contamination.

GEC © 2007

First Search also reviewed the 2006 EPA listings of facilities and study areas that have been removed from the NPL database. This list was reviewed by First Search for inclusion of the Site and/or facilities or study areas within 1/2 mile of the Site.

The Site was not identified as a NPL delisted facility. In addition, the Site was not identified within the boundaries of an NPL delisted study area. An NPL delisted facility or study area was not identified within 1/2 mile of the Site.

FirstSearch reviewed the CERCLIS list for facilities within an approximate 1/2-mile radius of the Site. No CERCLIS facilities were identified within this search radius.

FirstSearch reviewed the NFRAP list for facilities within an approximate 1/2-mile radius of the Site. One CERCLIS NFRAP facility was identified within this search radius. Precision Mechanical at 1610 North 41st Place was located 0.19 mile northeast of the Site. This facility was apparently investigated during previous WQARF potentially responsible party (PRP) studies, but it was not identified as a responsible party by ADEQ. Since this facility is 0.19 mile northeast of the Site and has been placed on the NFRAP list by the EPA, it is not considered a recognized environmental condition at the Site.

The Site was not identified on the NPL, NPL delisted, CERCLIS, or NFRAP lists.

3.4 WQARF Facilities

The Water Quality Assurance Revolving Fund (WQARF) program was established to investigate and cleanup facilities contaminated or potentially contaminated with hazardous substances in Arizona. The WQARF program is the State equivalent to the Federal CERCLA program. Some facilities are placed on the WQARF Registry List. These facilities are the State equivalent to the Federal NPL facilities. In the FirstSearch report, the WQARF Registry List is identified as the State/Tribal Sites database. The State/Tribal Sites database also includes facilities identified on the Arizona Superfund Program List. This list includes WQARF Registry facilities, NPL facilities, and Department of Defense facilities.

FirstSearch reviewed the State/Tribal Sites database for facilities within an approximate 1-mile radius of the Site. FirstSearch identified one facility within this search radius. This facility was identified as the Motorola 52nd Street facility, which is located adjacent to the Site. The State/Tribal Sites database identifies this study area as an NPL study area. See Section 3.3 for a discussion of this study area.

The Site was not identified in the State/Tribal Sites database.

The ADEQ maintains a list of facilities pending investigation under the WQARF program. ADEQ's list is known as the WQARF Pending Investigation (PI) list. At the time of this report, ADEQ had not publically distributed this list. ADEQ indicated that currently the list is only updated when a facility status changes. ADEQ provided us a copy of the list dated May 25, 2006 (Ref. 7a). We did not identify the Site or facilities in the near Site vicinity on this list.

ADEQ previously maintained a list of other State WQARF facilities and Federal CERCLA facilities known as the Arizona CERCLA Investigation and Data System (ACIDS). In the FirstSearch report, the ACIDS list is identified as the State Other database in the summary report. The ACIDS list includes facilities with known or suspected soil, surface water, or groundwater contamination. A memorandum dated July 5, 2000 issued by ADEQ indicated the ACIDS list has been archived and will no longer be distributed or updated. The memorandum also indicated "...the listing of properties on the ACIDS list is not an indication of liability or potential liability. Many of the properties on this list have no present involvement in WQARF or Federal Superfund."

FirstSearch reviewed the ACIDS list for facilities within an approximate1/2-mile radius of the Site. FirstSearch identified one facility on the ACIDS list within this search radius. The Precision Mechanical facility at 1610 North 41st Place located about 0.19 mile northeast of the Site is listed on the ACIDs list. As discussed in Section 3.3, this facility was investigated by the EPA during their initial work in Phoenix. The files for this facility has been archived by the EPA indicating that they are no longer being investigated. Therefore, this facility is not considered a recognized environmental condition at the Site

The Site was not identified on the ACIDS list.

3.5 RCRA Facilities

EPA regulates hazardous waste under the Resource Conservation and Recovery Act (RCRA). EPA maintains a database of facilities which generate hazardous waste or treat, store, and/or dispose (TSD) of hazardous wastes. The database is known as the Resource Conservation and Recovery Information System (RCRIS). In addition to identifying generators of hazardous waste and TSD facilities, this database includes the RCRA Administrative Action Tracking System (RAATS), the Compliance Monitoring and Enforcement List (CMEL), facilities undergoing corrective action, and facilities no longer regulated (NLR) by RCRA.

The FirstSearch report identifies generator facilities as RCRA GEN, TSD facilities as RCRA TSD, facilities no longer regulated as RCRA NLR, and facilities undergoing corrective action as RCRA CORACT facilities. FirstSearch includes available RAATS and CMEL information within specific facility information.

FirstSearch reviewed the RCRIS for generator and NLR facilities within an approximate 1/20-mile radius of the Site, TSD facilities within an approximate 1/2-mile radius, and facilities undergoing corrective actions within an approximate 1-mile radius of the Site.

No TSD facilities, facilities with RCRA corrective action enforcement, or RCRA NLR facilities were identified by FirstSearch within the search radii.

One RCRA facility was identified by FirstSearch. Alpine Cleaners at 1638 North 40th Street, located about 1/20 mile northeast of the Site, is a RCRA small quantity generator. No violations

or enforcement actions were identified for this facility. Therefore, we believe that this facility is not considered a recognized environmental condition at the Site.

The Site was not identified on the RCRA list.

ADEQ also maintains a list of facilities that are, or have been, under investigation for violation of RCRA regulations. ADEQ's list is known as the RCRA Compliance Log. Once a facility is no longer under investigation, it can be removed from the list. GEC reviewed ADEQ's RCRA Compliance Log, dated August 16, 2006 (Ref. 7b).

The Site was not identified on the RCRA Compliance Log.

3.6 Underground Storage Tank Facilities

Underground storage tanks (USTs) containing hazardous or petroleum substances are also regulated under RCRA. ADEQ maintains a list of registered USTs within the State. This list was reviewed by FirstSearch for facilities with registered USTs located within an approximate 1/20-mile radius of the Site.

FirstSearch identified two facilities with registered USTs within this search radius. The facilities included the Diamond Shamrock #1635 at 3980 East Mcdowell Road and the 7-Eleven #21889 at 4002 East McDowell Road, both located about 0.04 mile northeast of the Site. No spills or leaks have been identified for the Diamond Shamrock store, as discussed below, and the 7-Eleven is listed on the leaking UST (LUST) list discussed below as closed. Therefore, we believe that this facility is not considered a recognized environmental condition a the Site.

The Site was not identified on the UST list. We did not observe indications of USTs on the Site during our reconnaissance.

ADEQ also maintains a list of LUSTs within the State. This list was checked by FirstSearch for reported LUSTs located within an approximate 1/2-mile radius of the Site.

FirstSearch identified 8 LUST facilities within the search radius. The LUST facilities are summarized in the table below.

Facility	Distance/ Direction	LUSTs	Status
7-Eleven 4002 East McDowell Rd.	0.04 mile NE	1 LUST	Closed - soil meets RBCA Tier 1
J & S Service Center 4226 East McDowell Rd.	0.24 mile NE	2 LUSTs	Open - undefined or unknown soil contamination
UNOCAL #6062 4352 East McDowell Rd.	0.45 mile NE	1 LUST	Closed - soil meets RBCA Tier 1

Facility	Distance/ Direction	LUSTs	Status
AMOCO #6009 4357 East McDowell Rd.	0.46 mile NE	4 LUSTs	All closed - soil meets RBCA Tier 1
UNOCAL #5974 4002 East Van Buren St.	0.48 mile SE	4 LUSTs	Closed - soil meets RBCA Tier 2
All Star Car Wash 3232 East McDowell Rd.	0.49 mile NE	1 LUST	Closed - soil meets RBCA Tier 1
Mobil 18-KEA 4402 East McDowell Rd.	0.50 mile NE	3 LUSTs	Open
Circle K Store #2701344 1002 North 32nd St.	0.50 mile NW	1 LUST	Closed - soil meets RBCA Tier 1

With the exceptions of the J & S Service Center and the Mobil facility, all of the reported LUST cases have been closed. The J & S Service Center is located approximately 1/4 mile from the Site, and only impacted soil was reported. The Mobil 18-KEA facility is located 1/2 mile from the Site in a cross-gradient location from the Site. Based on the distance to the Site, we believe these facilities are not considered a recognized environmental condition at the Site.

The Site was not identified on the LUST list.

3.7 Solid Waste Facilities

Solid waste facilities are also regulated under RCRA and State solid waste programs. ADEQ maintains several lists of active and closed solid waste facilities, which are located throughout the State. FirstSearch reviewed these lists for active or closed solid waste facilities located within an approximate 1/2-mile radius of the Site.

FirstSearch identified no solid waste facilities within this search radius.

The Site was not identified on the solid waste facilities lists.

3.8 ERNS/Hazardous Materials Incident Logs

Spills of oil or hazardous substances are required to be reported to various Federal and State agencies under numerous regulations. The Emergency Response Notification System (ERNS) is a national database used to collect information on reported releases of oil and hazardous substances. ADEQ also maintains a hazardous materials logbook that is used to collect similar information regarding releases and threats of releases of oil and hazardous substances. In the FirstSearch report, the ADEQ and ERNS lists are identified as State Spills 90 and ERNS, respectively. These databases include information reported to EPA, the U.S. Coast Guard, the National Response Center, the Department of Transportation, and ADEQ. FirstSearch checked

GEC © 2007

the ERNS list for incidents within 1/20 mile of the Site, and ADEQ's hazardous materials logbook lists for incidents within an approximate 1/20-mile radius of the Site.

FirstSearch identified one ERNS listing and no State incidents within this search radius.

An ERNs incident was recorded at 1225 North 40th Street, approximately 0.01 mile east of the Site on the east side of 40th Street. The ERNs incident report indicates a dumping incident of 10 gallons of fluoboric acid in 1991. Apparently the material was removed by Disposal Control, Inc. Since this incident was not located on the Site, it was cleaned up over 15 years ago, and acids are not persistent in the environment, we believe this ERNs incident is not considered a recognized environmental condition at the Site.

The Site was not identified on the ERNS or Spills 90 lists.

3.9 Drywells

Beginning in the 1970s, many municipalities in the Phoenix metropolitan area required that storm water on newly developed commercial or industrial properties be retained and disposed on the property. Depending upon specific development and drainage conditions, one common method used to dispose of storm water is the use of a drywell. Drywells are typically circular drilled shafts in the ground, 4 to 6 feet in diameter and 20 feet to 80 feet or more deep, that are used to dispose of storm water.

Drywells are regulated under the Federal Safe Drinking Water Act and several State regulations. ADEQ maintains a list of drywells in the State. In the FirstSearch report, the drywell list is identified as the State Permits database in the summary report. FirstSearch reviewed the State Permits list for registered drywells within an approximate 1/20-mile radius of the Site.

FirstSearch identified two drywells on adjacent properties. First Search did not identify any drywells on the Site. Since the two identified drywells were not located on the Site, we believe they are not considered recognized environmental conditions at the Site.

3.10 Arizona Voluntary Remediation Program Project Status List

The ADEQ Waste Programs Division maintains a list of Voluntary Remediation Program facilities (VRP). A VRP is an eligible contaminated facility where voluntary investigation and cleanup measures have been taken by property owners, prospective purchasers and other interested parties in cooperation with ADEQ. In the FirstSearch report, the VRP list is identified as the State/Tribe VCP list in the summary report. FirstSearch reviewed the ADEQ VRP List for facilities with an approximate 1/2-mile radius of the Site.

FirstSearch did not identify VRP facilities within 1/2 mile of the Site.

The Site was not identified by FirstSearch as being listed on the VRP list.

GEC © 2007

3.11 Brownfields Program List

A brownfield facility is an abandoned or under-used property with an active redevelopment potential that is complicated by either real or perceived environmental contamination. The ADEQ Waste Programs Division maintains a list of brownfield facilities as part of its VRP. To be listed by the ADEQ as a brownfield facility, a facility must be an underutilized commercial or industrial facility, possess redevelopment potential, and the redevelopment potential must be complicated by known or perceived contamination with a hazardous substance as defined by CERCLA. The Brownfields Management System (BMS) is an analytical database designed to assist the EPA in collecting, tracking and updating information, as well as reporting on the major activities and accomplishments of the various brownfield grant programs. FirstSearch reviewed the ADEQ brownfields list within an approximate 1/2-mile radius of the Site.

FirstSearch identified no brownfield facilities within a 1/2-mile radius of the Site.

The Site was not identified by FirstSearch as being listed on the brownfields list.

3.12 Institutional and Engineering Control Registries

The BMS includes Superfund facilities that use USEPA funded institutional (i.e., administrative) and/or engineering (i.e., physical) controls to meet remediation goals. The ADEQ Declaration of Environmental Use Restriction (DEUR) and Voluntary Environmental Mitigation Use Restriction (VEMUR) Program Lists include State facilities that use institutional and/or engineering controls to meet remediation goals. A DEUR is a restrictive covenant that must be recorded when the owner of a facility with known contamination uses institutional or engineering controls to prevent or minimize exposure to contaminants on the property, or when an owner elects to leave contamination on the property that exceeds applicable residential soil remediation standards for the property. The VEMUR program has been replaced by the DEUR program, but historic VEMUR data is provided by ADEQ. In the FirstSearch report, the Federal institutional and engineering control registry list is identified as Fed IC/EC in the summary report, and the State institutional and engineering control registry list is identified as the State/Tribe IC and State/Tribe EC lists. FirstSearch reviewed the Fed IC/EC, State/Tribe IC, and State/Tribe EC lists for facilities at the Site.

The Site was not identified on the Fed IC/EC, State/Tribe IC, or State/Tribe EC lists.

We reviewed the online ADEQ AZURITE database for institutional or engineering controls on the Site (Ref. 7c). According to ADEQ, the AZURITE database is updated approximately every two weeks.

The Site was not identified on the ADEQ AZURITE database for institutional or engineering controls.

First Search identified one facility on the ADEQ institutional control (DEUR) list. The 7-Eleven #21889 located at 4002 East McDowell Road, about 0.04 mile northeast and across the street from

the Site, was listed. It is our experience the DEURs are issued when soils at a facility are remediated to the non-residential soil remediation level. The DEUR restricts the property to non-residential uses only. We believe this listing does not represent a recognized environmental condition at the Site.

3.13 Tribal Lands

The Indian Lands of the United States database includes areas with boundaries established by treaty, statute and/or executive or court order, recognized by the Federal government as territory in which Native American tribes have primary governmental authority. The Indian Lands of the United States map layer shows areas of 640 acres or more administered by the Bureau of Indian Affairs. Included are Federally-administered lands within a reservation which may or may not be considered part of the reservation. FirstSearch reviewed the Tribal Lands database for facilities within an approximate 1-mile radius of the Site.

FirstSearch identified no tribal land facilities within this search radius. The Site was not identified on the tribal land list.

3.14 Unmapped Facilities

FirstSearch will identify facilities that could not be plotted due to inadequate or missing information as "non-geocoded" (NON GC) in the distance and direction column of the Sites Summary Report. FirstSearch identified the Motorola, Inc. (52nd Street Plant) at 5005 East McDowell Road as being on the Federal Brownfields list. It is listed for engineering controls. The brownfields study area is probably for this facility only. Therefore, we believe this listing does not represent a recognized environmental condition at the Site.

GEC © 2007

4. HISTORICAL LAND USE

4.1 General

As part of this assessment, GEC reviewed reasonably available engineering and historical records of the Site. The emphasis of the review was to identify previous uses of the Site that might indicate the presence of recognized environmental conditions. This section summarizes the findings of GEC's historical review.

Information concerning the history of the Site and/or vicinity was provided to GEC by a number of agencies, firms, and people, as listed below and as detailed on our contact log presented in Appendix E.

Allands
Arizona State Lands Department
Maricopa County Flood Control District
Maricopa County Assessor's Office
TRACK-Info Services, LLC
Wanda Bulger, Arizona State Hospital director of volunteers
Jody Lattimer, ASLD
Chuck Hudson, ASLD
John Wroble, Arizona State Fire Marshal's Office
Damian Low, ADWR
Todd Bostwick, City of Phoenix archaeologist
Edward Packard, V3 Companies of Arizona
Greg Wolterstorff, V3 Companies of Arizona

4.2 Site Ownership

The Site is identified as Parcel 001B on Map 01 of Book 121, as shown on Figure 2. We subcontracted Allands to prepare a historical chain-of-ownership report for the Site. A copy of the Allands report is presented in Appendix F.

According to the Allands report, the current owner of the Site is the State of Arizona. The State of Arizona has owned the Site since 1917, except between 1960 and 1972, when the Site was owned by Brigham Young University. Prior to 1917, the Site was owned by J.C. and Anna Adams.

We did not identify previous Site owners associated with ranching, manufacturing, oil exploration, oil companies, mining, or industry. We did not identify previous owners that would indicate potential commercial or industrial usage of the Site.

The Allands report identified several special use permits, a commercial lease, and several special land use permits for the Site. The lessees included: various individuals, 40th Street and

McDowell Road Joint Venture (Joint Venture), Arizona Veterans Service Commission, El Zaribah Shrine Temple, Motorola, Hargis & Associates, Inc., and Allied Signal, Inc. Based on our review, the special use permits issued to Motorola, Hargis &Associates, and Allied Signal were probably for the installation and /or sampling of groundwater monitoring wells. All of the recorded leases and permits were dated between the years 1973 and 2001, and all the leases and permits were terminated or expired, excluding the lease by Joint Venture. Joint Venture maintains a commercial lease on the Site until 2087.

No environmental liens, voluntary environmental mitigation use restrictions (VEMURs), or declaration of environmental use restrictions (DEURs) were identified in the title search.

4.3 Aerial Photographs

A review of aerial photographs of the Site was previously completed at Rupp. Four photographs dating between 1940 and 1957 were reviewed at Rupp. The scale of these photographs was approximately 1 inch equals 1,600 feet. For this report we reviewed aerial photographs of the Site on the Maricopa County Flood Control District's and Maricopa County Assessor's websites and from City of Phoenix Development Services quarter section aerial photographs. Four aerial photographs dating between 1937 and 1962 were reviewed on the Maricopa Flood Control District's website. Eight aerial photographs dating between 1999 and 2006 were reviewed on the Maricopa County Assessor's website. Nine City of Phoenix aerial photographs dating between 1961 and 1999 were also reviewed. The scale of these photographs was approximately 1 inch equals 100 feet.

Based on our review, the Site had already been developed with a several buildings and a large silo by 1937. In the aerial photograph dated 1940, we identified several features on the Site including large agricultural fields covered with crops, and a large developed area in the southeastern portion of the Site. Generally, agricultural fields covered the northern and western portions of the Site. Dirt roads and irrigation ditches crossed the agricultural fields. The southeastern area of the Site was developed with a large farm operation. We observed at least 20 structures in the farm operation area of the Site. Utility poles crossed through the developed areas of the Site. We also observed scattered debris, and what may have been soil, trash, debris, and/or manure piles at various locations in the developed areas.

The structures on the farm appeared to be residences, large barns, sheds, and several smaller ancillary structures. The farm development area was enclosed with fencing in addition to several smaller corrals and grazing areas that were also fenced. We observed seven long structures that may have been barns, a grain silo, canopied areas, sheds, and a grazing field in the farm development area. The eastern boundary of the Site in this area appeared to be mostly residentially development with at least three houses in different areas. The eastern Site boundary was heavily vegetated with trees and bushes, making it difficult to identify structures in the vicinity of the houses.

Between 1940 and 1961, the farm operation and residences on the Site remained relatively unchanged with the exception of the replacement and/or demolition of smaller structures throughout the photographs. Larger structures were visible throughout these photographs.

In the aerial photograph dated 1964, the farm appeared to no longer be operating, and all of the agricultural fields appeared to fallow. The main structures on the Site were still visible (the barns, residences, and silo); however, many of the smaller structures and/or canopies had been removed. Utility poles and some fencing observed in earlier photographs had also been removed. The condition of the residences and barns appeared to be deteriorating.

In the aerial photograph dated 1971, the developed area appeared to be in the process of being cleared. Many of the structures had been removed from the Site. Several concrete slabs were visible in this photograph. We observed a cleared strip of land extending west from the developed area. The soil appeared disturbed along this strip, and it lead to an area were trash and debris were being dumped.

Between 1964 and 1971, 40th Street was realigned to eliminate a 175-foot offset in 40th Street as it crossed McDowell Road. As part of this realignment approximately 1.3 acres of land was removed from the northeast corner of the Site and remained a triangular-shaped median island.

In the photographs dated 1971 and 1978, the majority of the Site remained fallow agricultural crop land, and the structures on the Site appeared to be deteriorating and collapsing and/or were being removed. In 1982, the agricultural fields on the Site was actively being farmed. The majority of the structures had been cleared from the Site in this photograph. Only four large structures and a few small sheds remained on the Site. A significant amount of trash and debris was scattered across the formerly developed areas, and numerous concrete slabs were visible.

In the photograph dated 1986, the agricultural fields appeared to be fallow. All structures had been demolished, but the concrete slabs and foundations remained in place. Soil disturbances and soil mounding covered the western half of the formerly developed area, and debris was scattered across the Site. A large portion of the dense vegetation observed in the vicinity of the developed areas along the eastern boundary of the Site had been removed.

In the photographs dated 1995 and 1999, the Site appeared essentially the same as during our reconnaissance. The Site was vacant land and appeared to have been cleared. A large amount of the debris was gone, and the small soil piles were gone. The only visible remnants of the former development were the concrete slabs and foundations of the structures. The chain link fence observed during our reconnaissance was observed in these photographs.

Since the construction of the Loop 202 Highway, the Site has remained essentially unchanged.

Site Vicinity

During the course of our aerial photograph review, we also observed significant features in the Site vicinity. In 1940, the land to the north and east of the Site was agricultural farm land with scattered farm houses. To the west, we observed scattered residential development mixed with agricultural land. The area south remained farmland. In the 1940s, 1950s and 1960s, the aerial photographs showed increasing residential development to the west of the Site. By 1957, the general Site vicinity to the north and west was residentially developed. The area east of the Site was agricultural land in transition to residential development. By the 1960s, the entire Site vicinity was residentially developed. Land adjacent to the Site on the west and south remained agricultural farmland while the land adjacent to the Site to the north and east across from McDowell Road and 40th Streets were commercially and residentially developed. Between 1971 and 1975, the land adjacent to the Site on the northwest was developed with an office complex. In the 1991 aerial photograph, the Loop 202 Freeway had been constructed. Between 1991 and 1995, the office complex to the northwest of the Site was not observed. Between 2001 and 2006, the aerial photographs showed the construction of three different apartment complexes northwest of the Site making the Site vicinity appeared essentially the same as it did at the time of our reconnaissance.

4.4 Map Review

We reviewed the Phoenix, Arizona and Tempe, Arizona USGS 7.5-Minute series topographic maps for land including the Site. The maps were both dated 1952 and photorevised in 1982 (Ref. 15). The eastern portion of the Site was located on the Tempe Quadrangle, and the western portion of the Site was located on the Phoenix quadrangle. The maps indicated that the northeast corner of the Site had an approximate elevation of 1,160 feet above mean sea level (MSL) and the southwest part of the Site had an elevation of 1,150 above MSL. The closest surface water to the Site was the Salt River, located approximately 2-1/2 miles south of the Site. The northern and eastern portions of the Site was identified as the Arizona State Hospital Farm on the Tempe map. The map identified 11 structures and a well on the Site. Two light duty roads were identified crossing the developed areas on the southeast portion of the Site. The map indicated that a canal or aqueduct previously existed along the eastern border of the Site. The map did not identify gravel pits, mine shafts, landfills, wells, or other features of environmental concern on the Site.

We reviewed Sanborn Maps for the City of Phoenix on the Phoenix Public Library's website. Although Sanborn Map coverage is available for the Site vicinity, there is no Sanborn Map coverage for the former Arizona State Hospital Farm.

4.5 City Directories

We previously reviewed city directories for the Site at the Arizona Room at the City of Phoenix public library. Based on our research for our previous report, farm operations ceased around 1960. Therefore, we reviewed city directories for the years 1949/50 through 1965.

According to our review of city directories, we identified four addresses for the Site (948, 1004, 1218, and 1302 North 40th Street). We found four residential listings for the Site in the 1949/50 city directory. The Arizona State Farm Hospital was identified in the 1953 directory at 948 North 40th Street; however, in the 1955 directory the farm was identified at 1004 North 40th Street, and the 948 address was listed as residential. After 1960, the farm was not listed at the identified addresses; however, residential listings continued to appear through 1965.

4.6 Site Development Records

We previously reviewed buildings records on file at the City of Phoenix Development Services for the Site addresses identified during our city directories review. The earliest building records identified for the Site was a plumbing permit issued to the 1218 North 40th Street residence in 1962. Because the area containing the Site was annexed into the City in 1955, no earlier records were found. Various other permits for tenant upgrades were noted in the files. The only permit for the farm at the 1004 North 40th Street address was a demolition permit for the farm issued in 1985.

Maricopa County Environmental Services Department (MCES) maintains septic system records back to the early-1980s. Records for septic systems for State and Federal facilities, as well as County facilities such as schools and jails, are maintained by the ADEQ Water Quality Division. We understand MCES's older septic system records related to residential and commercial facilities were filed with the Arizona State Library Records Management office. According to a representative of the Records Management office, septic system records in their archives are searchable through the MCES by a physical address. The MCES had no records for the Site.

There is currently no sewer service for the Site. We researched the sewer connections to the Site vicinity. Sanitary sewer lines were installed by the City along McDowell Road west of 38th Street in 2001 and to the apartments northwest of the Site in 2003. Based on our prior discussions with the City of Phoenix Water Services Department, sewer services were available along 40th Street in 1963, and city water was available along 40th Street in 1975.

During the time that the State Hospital farm was operating at the Site, there were no sanitary sewer connections available to the Site. Therefore, during that time period the farm buildings were likely connected to septic systems. Farming operations were conducted at the Site and the septic systems may have been used for non-domestic wastes. The use of the septic system for non-domestic waste is considered a potential recognized environmental condition.

We conducted a file review of document listings relating to the Site at the ASLD. One file relating to the retention basin was identified. The staff at the ASLD was unable to locate the file for our review. The ASLD staff said they would continue to search for the file. As of the date of this report, the file has not been located for our review.

As discussed in Section 4.8, no records for the Arizona State Hospital Farm were available for our review.

4.7 Fire Records

Although some of the buildings on the Site previously had addresses, they have not have addresses since the State Farm Hospital was demolished. In previous conversations with the City of Phoenix fired department, we were informed that fire department records are maintained by address. The area containing the Site was not annexed into the City of Phoenix until 1955, just prior to the closing of the farm. Additionally, based on our experience, the fire department does not have records earlier than the 1960s. Any available records were likely from the 1960s when no activities were conducted and no farm buildings were located on the Site. Therefore we did not request fire department records for the Site.

We previously spoke to John Wroble of the Arizona State Fire Marshal's Office (ASFM). According to Mr. Wroble, the ASFM does not have any records on file of USTs, ASTs, hazardous materials responses, or other matters for the Site.

4.8 Interviews

During the course of our previous and current assessment work, we attempted to contact several individuals who were familiar with the history of the Site. We previously contacted Mr. Bostwick and Mr. Ross for information regarding the archaeological condition of the Site. A summary of these discussions can be found in Section 4.10 of this report. We also contacted the State Hospital, the State Library, the Arizona Historical Society (AHS), the Arizona Historical Foundation (AHF) for information regarding the historic development and archaeological condition of the Site. A summary of these interviews is presented below.

We contacted the ASLD, the current owner of the Site, for information regarding the history of Site. We previously spoke with Chuck Hudson, an ASLD section manager for environmental issues, regarding development information and lease records for the Site. Mr. Hudson indicated that in the 1980s all the records related to the Site held by the ASLD, which probably included facility maps, building records, and other documentation relating to improvements made at the Site, had been transferred to archival storage. He said that records are only held in archives for ten years before being destroyed. Mr. Hudson had the archives searched for records pertaining to the Site, but they were unable to locate records for the Site. Mr. Hudson said the records were probably destroyed. He recalled that in the 1990s, the Site had been cleared of trash and debris including asbestos-containing materials (ACMs), and a fence had been installed. He indicated that the Risk Management Department of the ASLD had conducted a risk assessment on the Site, and they did not find it to be an environmental liability. He said that they considered the Site to be "relatively clean." He was not able to provide a copy of the risk assessment performed by ASLD. Mr. Hudson indicated that he aware the Site was previously developed as the Arizona State Hospital Farm; however, he did not believe the farm had been a major operation.

For this report we spoke with Jody Lattimer of the ASLD. She could not provide any information concerning the Site and suggested that we review the files at the ASLD office. As discussed in Section 4.6, the staff at the ASLD was unable to locate Site related files for our review.

We previously contacted the Arizona State Hospital for information regarding the former development on the Site. We previously spoke with Wanda Bulger, director of volunteer services for the State Hospital. Ms. Bulger indicated that the State Hospital did own a farm located at the Site until the early-1960s. She indicated that the State Hospital published annual reports, as well as a 75th Anniversary publication called "Milestones" that contained the history of the State Hospital. Aside from these documents, she was unable to provide any information regarding the operation of the farm. A review of the State Hospital's publications relating to the Site can be found in Section 4.9 below. We also contacted the engineering and facilities management department of the State Hospital. A representative from the department indicated that they did not have building records, sketches, or maps of the former development.

We previously contacted the AHS, AHF, and the State Library for information regarding the historical development at the Site. We spoke with a research assistant from each of these institutions regarding the Arizona State Hospital Farm in an attempt to identify historical documentation regarding the daily operation of the farm including photographs, building records, and maps of the development. The research assistants of these institutions directed us to the annual reports of the State Hospital and the 75th Anniversary publication of the State Hospital. We were unable to obtain any other information regarding the Site from these institutions.

We spoke with Damian Low of ADWR concerning the monitoring well with the satellite-linked transducer located on the Site. Mr. Low said the well is only used to monitor groundwater levels in the Phoenix Active Management Area and the data is available online. The ADWR website reports current water levels. He said that ADWR does not sample the groundwater, the only data provided on the website is water level elevation, depth to water, and water temperature.

We spoke with Greg Wolterstorff of V3 Companies of Arizona. Mr. Wolterstorff provided us with an Arizona State Land Department plat map showing the southern Site boundary. Mr. Wolterstorff said that the retention feature in the southwest corner of the Site was an ADOT retention basin for the adjacent Red Mountain 202 highway.

We provided our client with a copy of a User Questionnaire for Phase I ESAs to gather user information as required by All Appropriate Inquiry (AAI, 40 CFR 312) guidelines. This form was completed by Edward Packard of V3 Companies of Arizona. Mr. Packard was not aware of historic spills or chemical releases at the Site. Mr. Packard indicated he had no specialized knowledge or experience related to the Site, and he knew of no obvious indicators pointing to the likely presence of contamination at the Site. He also indicated the purchase price of the Site reasonably reflects the fair market value. A copy of the User Questionnaire is provided in Appendix G.

4.9 Previous Environmental Reports

In 2002, GEC prepared a report on a larger parcel of land that included the Site titled *Phase I Environmental Site Assessment, Mashburn's TSA Multipurpose Facility, SW of 40th Street and McDowell Road, Phoenix, Arizona* (GEC Project no. 02-0021B.R01)(Ref. 1). The previous report included a larger area of land both north and south of the Loop 202. The summary for this report

has been edited to cover only the portion of the larger Site that is included in this report. Findings of the previous report are discussed below.

- A portion of the Site was developed with the Arizona State Hospital Farm which operated from at least 1917 until the mid-1960s. The farm included dairy and poultry operations and agricultural fields. The farm was developed with about 20 to 30 structures including several residences, large barns, sheds, and several smaller ancillary structures. Historical reports indicate fuels, lubricants, insecticides, and pesticides were used in the operations at the farm. However, we were not able to find detailed information regarding exact features or operations at the Site. Based on our experience with typical dairy farm operations, it is likely that agricultural chemicals were stored and used at the facility, and farm equipment was fueled and maintained at the facility. Depending on past storage, handling, and waste disposition practices, these activities may have caused contamination at the Site. In addition, it is likely that silage pits, trash and/or burn pits have been associated with the historical operations. We recommended that a metal detection survey, exploratory excavations, and soil sampling and testing be performed in this area to evaluate these matters.

- Two to three residential dwellings were located on the Site as early as the 1940s through the mid-1960s. On-site septic systems were probably associated with each of the historical developments at the Site. Based on our experience, residential septic systems used only for the disposal of domestic wastewater generally do not represent a significant cleanup liability. However, since the farm operations at the Site included the use of hazardous materials, these materials may have been disposed into septic systems found in the former farm area. If septic systems are identified near the former farm operation area, we recommended the soils around the septic systems be sampled and tested for potential adverse impacts.

- Based on our review, groundwater contamination was previously identified beneath the Site associated with the Motorola 52nd Street Superfund Site. One groundwater monitoring well is located the Site associated with this groundwater plume. See Section 3.3 for a discussion of the Motorola 52nd Street Superfund Site.

- During our previous Phase I ESA for the Site, we identified a large industrial-type groundwater well in the former farm area. One additional smaller groundwater well was also identified in well records. We did not locate the smaller well during our reconnaissance; however, we identified a concrete surface feature near the identified location of the well during our Site reconnaissance. See Section 3.1 for a discussion of the ADWR monitoring well.

- During our previous Phase I ESA, we performed a limited program of surficial soil sampling and testing for the presence of various pesticides and herbicides in the soils at the Site. GEC obtained discrete surface soil samples from nine locations on the Site. The soil sample locations were selected the north-central portion of the Site. Nine discrete samples were composited by the laboratory into three samples and the composite samples were analyzed for organochlorine pesticides using EPA Method 8081A and for chlorinated herbicides using EPA Method 8151A. The pesticide 4,4'-DDD was detected in the three composite samples at concentrations ranging between 0.034 and 0.053 milligrams per kilogram (mg/kg). No other

pesticides or herbicides were detected above laboratory reporting limits in the composite samples. The detected concentrations of 4,4'-DDE were well below the current SRL of 13.0 mg/kg. Therefore, we believe that the low concentrations of this pesticide found in the composite samples do not represent a recognized environmental condition to the Site.

4.10 Special Historical Issues

We previously spoke with Todd Bostwick, City of Phoenix archaeologist, regarding the presence of archaeological features at the Site. Mr. Bostwick indicated that the northern portion of the Site appeared to be clear of archaeological remains.

In the 1990s the Site was fenced to restrict access to the Site. Because of the close proximity to the La Lomita and La Lomita Pequena archaeological sites, archaeological monitoring of the fence post excavations was conducted. The soil removed during the machine excavation of 444 post-holes was screened. The post-holes were reportedly 70 cm bgs which was deeper than the zone tilled during agricultural activities on the Site. No archaeological remains were identified in the soil from the post-holes.

4.11 Site History

The Site is located near the original Phoenix Settlement and near two of the oldest irrigated farm fields in the Valley (Ref. 1). The original settlement was located between 32nd and 36th Streets, from Van Buren Street to Harrison Street. The farm fields were irrigated with Salt River water from the original Swilling Ditches (named after Jack Swilling) which were completed March 12, 1868.

Historically, the eastern 2/3 of the Site was developed with the Arizona State Farm Hospital from about 1917 until the mid-1960s. Based on our review of available documents, activities at the farm included dairy and poultry operations, as well as agricultural activities. The farm was developed with about 20 to 30 structures including several residences, large barns, sheds, and several smaller unidentified structures. According to historical information about the farm operation, large amounts of fuel, lubricants, and insecticides were used in the farm operations. Based on our calculations and review of a farm budget found in historical documents, it appears that the farm purchased about 500 gallons of fuel per month. Therefore, it is likely at least one fuel tank was located on the Site during the operation of this facility. Since a budget for lubricants was identified in the report, it is likely this operation also had a fairly significant maintenance shop associated with the farm activities. Furthermore, the budget indicates that insecticides were used. Based on our experience with dairy farm operations, insecticides are used for dipping and/or spraying of the cows. Typically, a dip tank was excavated, filled with insecticides, and the cows were walked through the dip tanks. However, the historical records do not specifically identify a dip tank. Accumulations of insecticides have been identified in the areas of the dip tanks in these types of operations. The budget also indicates that spraying of ditches was performed on the Site, indicating herbicides or insecticides were probably applied along irrigation ditches for weed or insect control. Based on the size of the operation, we believe there were likely silage pits and trash and/or burn pits also associated with the historical operations. Based on our review and

experience with facilities similar to the development at the Site, agricultural chemicals were probably stored and used at the facility, and farm equipment was probably fueled and maintained at the facility. We believe these issues require further evaluation before an informed opinion regarding the environmental condition at the Site.

Several residential dwellings and farm structures were located on the Site as early as about 1917 through the mid-1960s. On-Site septic systems were probably associated with the historical development. Based on our experience, residential septic systems used only for the disposal of domestic wastewater generally do not represent a significant cleanup liability. Therefore, septic systems connected to a residential house should not represent a recognized environmental condition. However, since the farm operations at the Site included the use of fuels, lubricants, and insecticides, these materials may have been disposed into septic systems associated with the former farm structures. A geophysical survey of the southeastern portion of the Site should be conducted to locate these types of features, and they should be properly evaluated and abandoned according to the appropriate state and local guidelines.

Formerly a large industrial-type groundwater well, Well ID 55-801656, was located near the southeast corner of the Site. This well was converted into a monitoring well used in the Motorola 52nd Street Superfund Site groundwater monitoring. It has recently been further modified and is now used by ADWR to monitor groundwater levels in the Phoenix Management Area.

An additional groundwater well, Well ID 55-801658, was also identified in well records. Based on the well records, the casing for this well was cut at approximately 16 inches bgs, the casing filled with soil, and a steel plate was welded to the top of the casing. This treatment is not considered well abandonment by ADWR. We could not locate the well during either of our Site reconnaissances, as the casing was located below the ground surface. This well should be located during a geographical survey and properly abandoned in accordance with ADWR guidelines prior to future Site development.

As discussed in our previous report, historical records of the Site from the ASLD report on an environmental restoration project conducted on the Site in 1995. At that time, based on preliminary sampling conducted by ADEQ, dumping of asbestos containing materials (ACM) on the Site was reported to the ASLD. The ASLD hired a subcontractor to perform ACM abatement at the Site. Thirteen and one-half cubic yards of ACM were disposed of by Law Environmental at the Butterfield Station Landfill. On August 1, 1995 ADEQ submitted a closure letter approving of the asbestos clean-up project.

Based on the previous dumping, the majority of the Site was fenced to restrict access to the Site. Because of the close proximity to the La Lomita and La Lomita Pequena archaeological sites, archaeological monitoring of the fence post excavations was conducted. The soil removed during the machine excavation of 444 post-holes was screened. No archaeological remains were identified in the soil from the post-holes.

We previously conducted pesticide and herbicide screening of soils in the northern portion of the Site. The pesticide 4, 4'-DDD was detected at low concentrations in all samples collected. The

GEC © 2007

concentrations detected were well below the current ADEQ residential SRL for 4, 4'-DDD. No other pesticides and no herbicides were detected in the Site soils. The low concentrations of 4, 4'-DDD detected in Site soils is not considered a recognized environmental condition at the Site. This previous pesticide and herbicide screening was limited in scope. If the Site will be residentially developed, we recommend additional pesticide screening across the former farm field areas on the Site.

GEC © 2007

5. CONCLUSIONS

We performed a Phase I Environmental Site Assessment in general conformance with the scope and limitations of ASTM Practice E1527-05 on a portion of a parcel of vacant land at the southwest corner of 40th Street and McDowell Road in Phoenix, Arizona. A previous Phase I ESA conducted by GEC identified several areas of environmental concern on the Site, and Phase II sampling and testing were previously recommended. However, we have not conducted the additional Phase II assessment, and we were not provided with the results of any Phase II work performed by others.

The information summarized in this report is not sufficient to guarantee the absence of recognized environmental conditions at the Site. However, our assessment has revealed several recognized environmental conditions associated with the Site, mainly associated with the former farm development on the Site. Based on the findings of this Phase I ESA, we recommend the following additional assessment of the Site.

- Pesticide and herbicide screening of any future residential areas.
- A Phase II investigation of the former farm development area including a geophysical survey to locate buried metallic objects, septic systems, the capped well, any trash pits, any silage pits, and other suspect materials; exploratory excavations in suspect areas identified by the geophysical survey and around the former development areas; and sampling and testing of surface and subsurface soils on the Site.

We found records for two groundwater wells on the Site, but there could also be old domestic water wells found on the Site. If any additional wells are found on the Site, they should be properly registered, and either abandoned or operated in accordance with ADWR regulations. In addition, there may be residential septic systems on the Site that will need to be properly evaluated and abandoned if found.

GEC © 2007

6. LIMITATIONS

This report was prepared for V3 Companies of Arizona, exclusively and it is subject to the terms presented in our contract. No other person or entity may rely on this report without the prior written consent of Geotechnical and Environmental Consultants, Inc. (d.b.a. GEC). GEC is not a law firm, and therefore makes no representations regarding any potential liability of any person for Site conditions.

GEC performed this assessment in general agreement with the scope and limitation of ASTM E1527-05 and our contract. The opinions, conclusions, and recommendations provided by GEC are based solely on the information presented in this report and our discussions with our client considering the client's tolerance for risk and the client's stated plans for the Site. We used our experience, judgement, and discussions with the client to specifically list those recognized environmental conditions that we believe are significant to our client. This report should only be reviewed and used in its entirety. Additional information which was not readily available to GEC at the time of this report may result in a modification of the conclusions presented.

GEC © 2007

7. REFERENCES

1. *Phase I Environmental Site Assessment, Mashburn's TSA Multipurpose Facility, SW of 40th Street and McDowell Road, Phoenix, Arizona*, February 14, 2002, prepared by GEC.

2. *Maps Showing Groundwater Conditions in the Phoenix Active Management Area, Maricopa, Pinal, and Yavapai Counties, Arizona*-1992; B.A. Hammett and R.L. Herther; Arizona Department of Water Resources, Hydrologic Map Series Report No. 27, 3 Sheets; July 1995

3. *Maps Showing Groundwater Conditions in the Phoenix Active Management Area, Maricopa, Pinal, and Yavapai Counties, Arizona–Nov. 2002-Feb. 2003*; S.J. Rascona; Arizona Department of Water Resources, Hydrologic Map Series Report No. 35, 3 Sheets; March/April 2005.

4 *Hydrogeology of the Eastern Part of the Salt River Valley Area, Maricopa and Pinal Counties, Arizona;* R.L. Laney and M. E. Hahn, U.S. Geological Survey Water Resources Investigation Open File Report 86-4147, 4 Plates, 1987.

5 Arizona Department of Water Resources, *Wells-55 CD*, dated September 2006.

6. ADWR Statewide Hydrologic Monitoring Program at http://www.azwater.gov/dwr/Content/Hot_Topics/Hydrologic_Monitoring_Program/Hydrologic_Monitoring_Page_12_20_06.html.

7. Information and Lists publicly available at Arizona Department of Environmental Quality (ADEQ):

   a. *WQARF PI List*, dated May 25, 2006.

   b. *RCRA Compliance Log,* dated August 16, 2006.

   c. ADEQ's AZURITE online databases - http://www.azdeq.gov/databases/deursearch.

8. Phoenix, Arizona and Tempe, Arizona, U.S. Geological Survey 7.5-minute series topographic maps, dated 1952, and photorevised in 1982.

9. Decision and Decree No. 4564 filed March 1, 1910 in the District Court of the Third Judicial District of the Territory of Arizona in and for the County of Maricopa: Patrick T. Hurley, plaintiff, the United States of America, intervener against Charles F. Abbott and four thousand eight hundred other defendants, before Chief Justice Kent sitting as District Judge. Records of the Water Commissioner, Maricopa County Superior Court, Film File No. 137.1.2, Microdex No. 1, Salt River Valley Water Users Association, 90 p., 1910.

GEC © 2007

FIGURES

Copyright© Wide World of Maps, Inc.
Reproduced With Permission No. 442569

COPYRIGHT © 2007

FIGURE 1. SITE LOCATION MAP
Vacant Land
SWC of 40th Street and McDowell Road
Phoenix, Arizona

Project No. 02-0021B

NORTH

NOT TO SCALE

TOWNSHIP 1N RANGE 3E SECTION 1
BOOK 121 MAP 01
PARCEL 001B

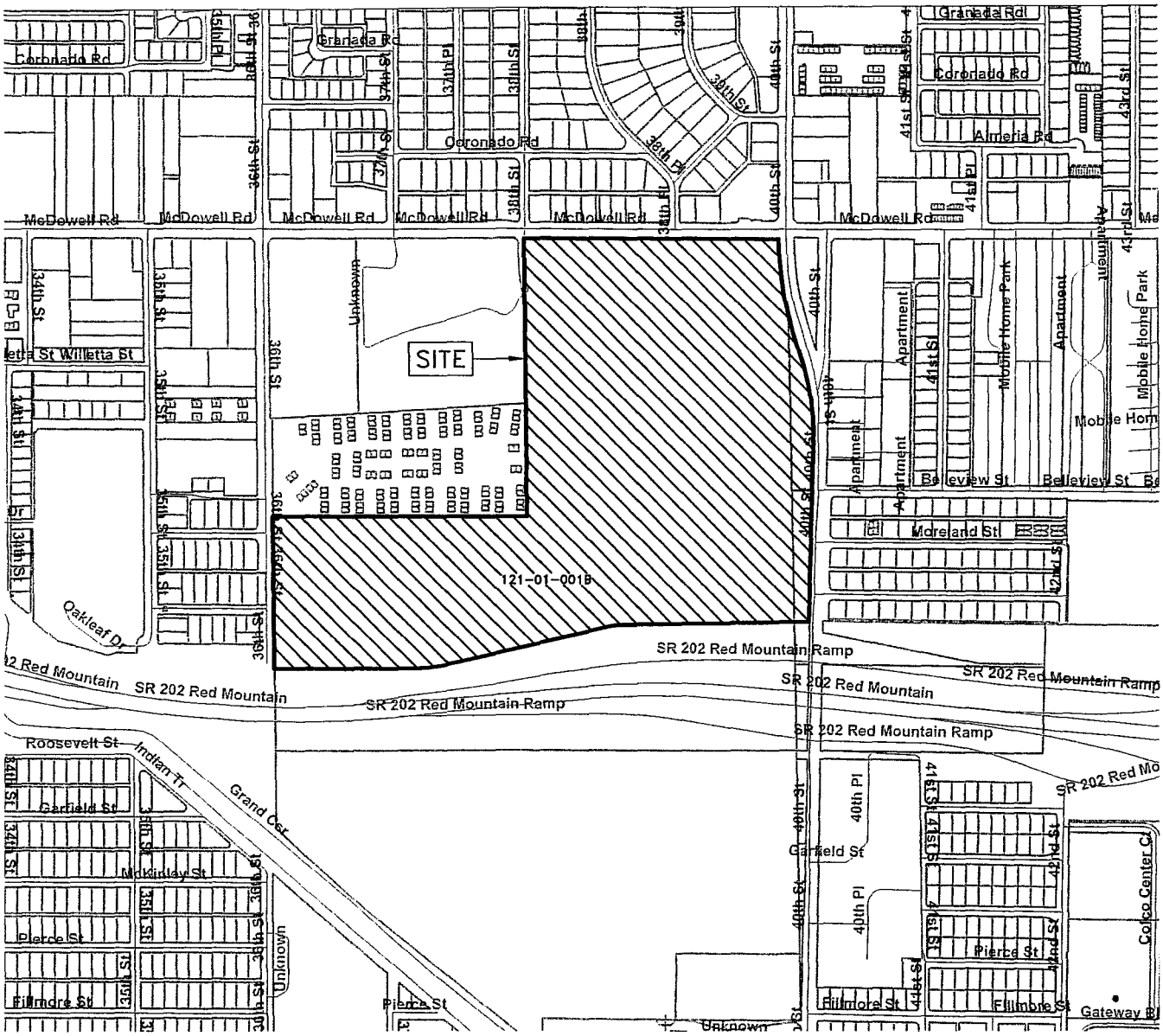

02cad/02-0021B/02-0021B.Fig2

FIGURE 2. **MARICOPA COUNTY ASSESSOR'S MAP**
Vacant Land
SWC of 40th Street and McDowell Road
Phoenix, Arizona

Project No. 02-0021B

COPYRIGHT © 2007

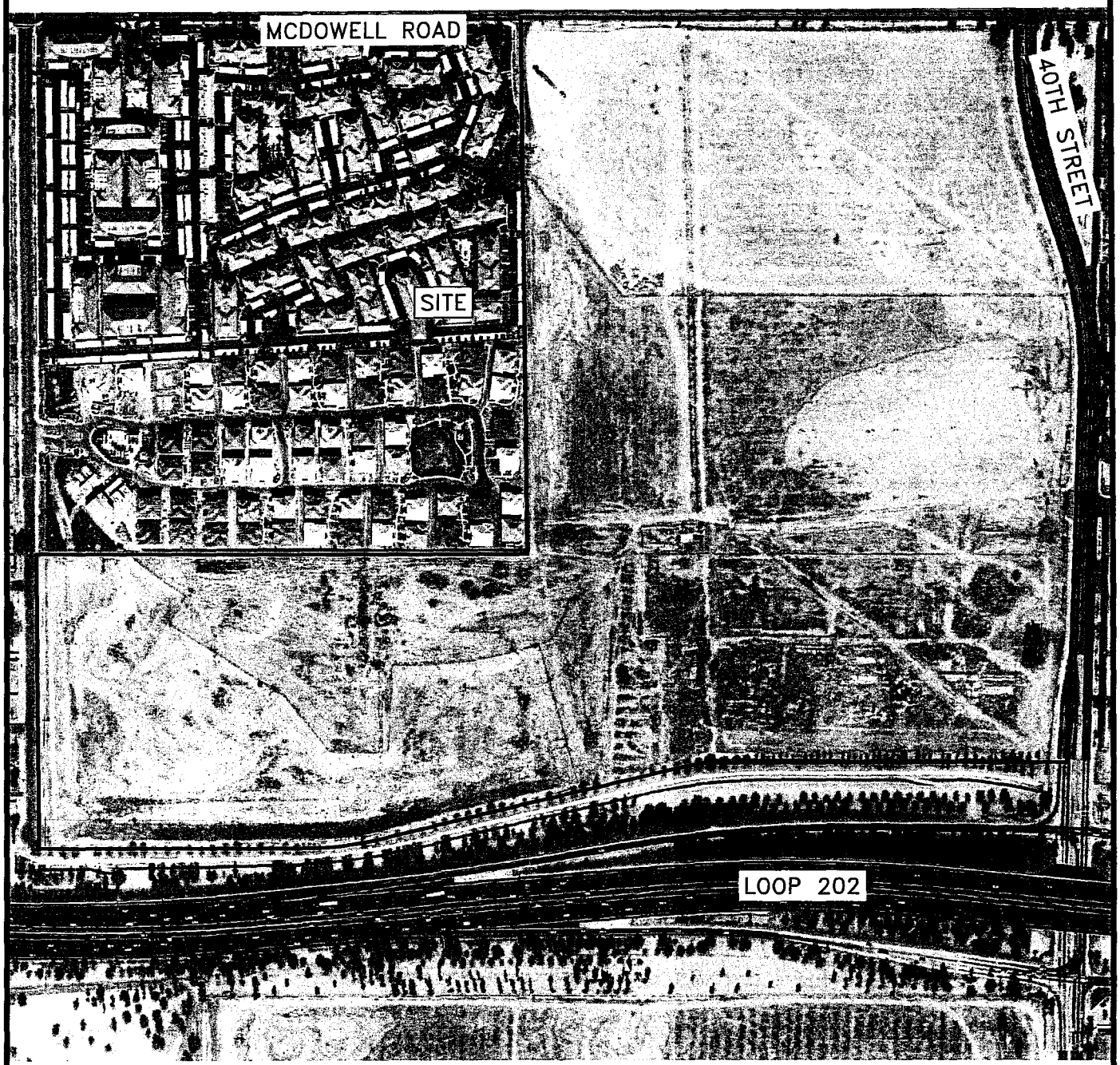

02cad/02-0021B/02-0021B.Fig3

FIGURE 3. **SITE PLAN**
Vacant Land
SWC of 40th Street and McDowell Road
Phoenix, Arizona

Project No. 02-0021B

COPYRIGHT © 2007

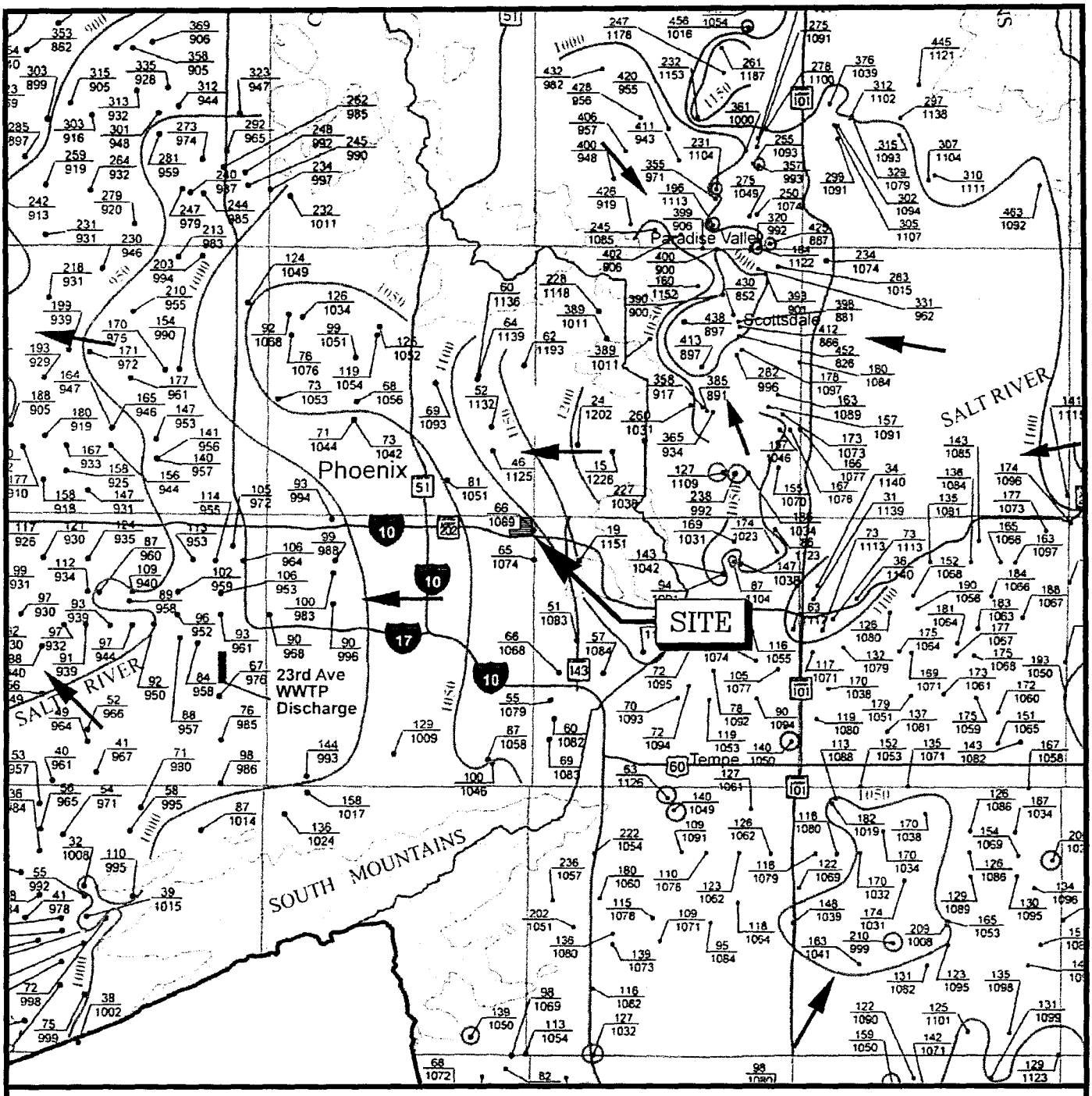

LEGEND (Arizona Department of Water Resources Map Series Report No. 35, Sheet 1.)

176/948 WELL IN WHICH DEPTH TO WATER WAS MEASURED IN 2002–2003 – Upper number, 176, is depth to water in ft below land surface. Lower number, 948, altitude of water level in ft.

950 WATER–LEVEL CONTOUR––Shows the approximate altitude of the water level. The number represents distance in feet above mean sea level.

N

Scale: 1" = 3.4 mi

COPYRIGHT © 2007

FIGURE 4. GROUNDWATER CONTOUR MAP
Vacant Land
SWC of 40th Street and McDowell Road
Phoenix, Arizona

Project No. 02–0021B

APPENDIX A

Photo 1. Looking south at one of the concrete slabs near the southwest corner of the Site.

Photo 2. Looking northeast from 36th Street at the western portion of the ADOT retention basin. Note the recently completed apartment complex located north of the southwest portion of the Site.

GEC © 2007

Photo 3. Looking south from 36th Street at a large culvert-type feature near the southwest corner of the Site.

Photo 4. Looking southwest from the northern portion of the Site across piles of trash, construction debris, and landscaping debris that have been dumped on the Site.

GEC © 2007

Photo 5. Looking southwest from the central portion of the Site at a squatter's camp.

Photo 6. Looking north from the southeast portion of the Site at the onsite ADWR Phoenix AMA monitoring well.

GEC © 2007

Photo 7. Looking west along the block wall that forms the northern Site boundary in the southwestern portion of the Site. Note the quarter section marker.

Photo 8. A view of one of the two City of Phoenix sanitary sewer manholes observed near the southwest portion of the Site.

GEC © 2007

APPENDIX B

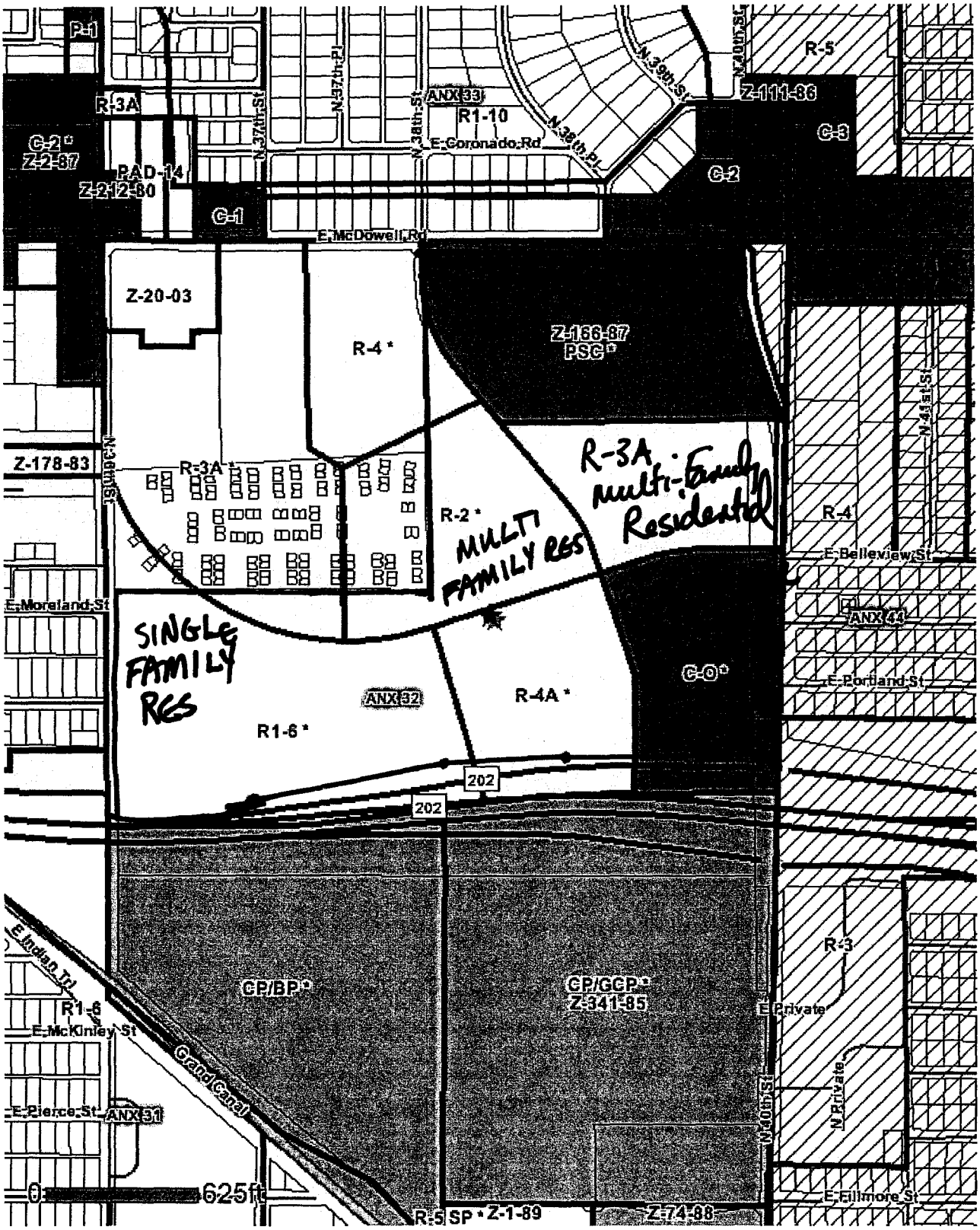
P-1
R-3A
C-2 *
Z-2-87
PAD-14
Z-212-80
C-1
N.37th.St
N.37th.Pl
N.38th.St
ANX 33
R1-10
E.Coronado.Rd
N.38th.Pl
N.39th.St
N.40th.St
R-5
Z-111-86
C-3
C-2
E.McDowell.Rd
Z-20-03
R-4 *
Z-166-87
PSC *
N.41st.St
Z-178-83
N.36th.St
R-3A *
R-2 *
MULTI FAMILY RES
R-3A multi-family Residential
R-4
E.Belleview.St
E.Moreland.St
SINGLE FAMILY RES
ANX 44
C-O *
E.Portland.St
ANX 32
R-4A *
R1-6 *
202
202
R-3
CP/BP *
CP/GCP *
Z-341-85
E.Private
R1-6
E.McKinley.St
Grand Canal
N.40th.St
N.Private
E.Pierce.St
ANX 31
625ft
R-5 SP * Z-1-89
Z-74-88
E.Fillmore.St

APPENDIX C

ADWR REGISTERED WELLS
T 1 N, R 3 E, NW 1/4 SECTION 1

WELL ID	TOWNSHIP	RANGE	SECTION	ACRE160	ACRE40	ACRE10	WELLUSE1	INSTALLED	WELLDEPTH	WATERLEVEL	COMPANY	ADDRESS	CITY	STATE	ZIPCODE
55-590469	1N	3E	1	NE			GEOTECHNICAL	22-Jan-02	100	100	THE MASHBURN CO INC	2398 E CAMELBACK RD STE 280	PHOENIX	AZ	85016
55-801656	1N	3E	1	NE	SE	NE	MONITOR	27-May-47	160	40	AZ STATE LAND DEPT,	1616 W ADAMS	PHOENIX	AZ	85007
55-801658	1N	3E	1	NE	SE	NE	CAPPED	01-Jan-51	40	40	AZ STATE LAND DEPT,	1616 W ADAMS	PHOENIX	AZ	85007

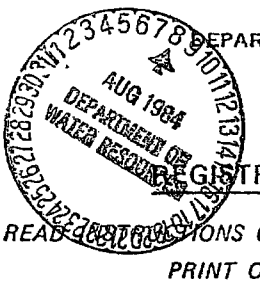

DEPARTMENT OF WATER RESOURCES
99 EAST VIRGINIA AVENUE
PHOENIX, ARIZONA 85004

Peterson
23-83900

REGISTRATION OF EXISTING WELLS

READ INSTRUCTIONS ON BACK OF THIS FORM BEFORE COMPLETING
PRINT OR TYPE — FILE IN DUPLICATE

04 07

REGISTRATION FEE (CHECK ONE)	
EXEMPT WELL (NO CHARGE)	☐
NON-EXEMPT WELL — $10.00	☒

FOR OFFICE USE ONLY
REGISTRATION NO. 55- 801656-L
FILE NO. A(1-3) 1 ADA
FILED 8-8-84 (DATE) AT AM (TIME)
INA ___
AMA Phoenix

1. Name of Registrant:
THE STATE OF ARIZONA - STATE LAND DEPARTMENT
1624 W. ADAMS (Address) PHOENIX (City) ARIZONA (State) 85007 (Zip)

2. File and/or Control Number under previous groundwater law:
_____ (File Number) 35- (Control Number)

3. a. The well is located within the NE ¼ SE ¼ NE ¼, Section 1, of Township 1 North [redacted] Range 3 East [redacted] G & SRB & M, in the County of Maricopa.

b. If in a subdivision: Name of subdivision _____, Lot No. _____, Address _____.

4. The principal use(s) of water (Examples: irrigation - stockwater - domestic - municipal - industrial)
_____.

5. If for irrigation use, number of acres irrigated from well _____.

6. Owner of land on which well is located. If same as Item 1, check this box ☒
NOT APPLICABLE
(Address) (City) (State) (Zip)

7. Well data (If data not available, write N/A)
a. Depth of Well 160 feet
b. Diameter of casing 6" inches
c. Depth of casing 160 feet
d. Type of casing STEEL.
e. Maximum pump capacity 50 gallons per minute.
f. Depth to water 40 feet below land surface.
g. Date well completed Prior to 1951 (Month) (Day) (Year).

8. The place(s) of use of water. If same as Item 3, check this box ☒.
____¼ ____¼ ____¼, Section ____ Township ____ Range ____
____¼ ____¼ ____¼, Section ____ Township ____ Range ____
Attach additional sheet if necessary.

9. DATE June 14, 1982 SIGNATURE OF REGISTRANT for Gerald L. Smith
STATE LAND COMMISSIONER

A(1-3) 1 ADA

RECEIVED
OCT - 8 [redacted]
RECORDS MGT

ARIZONA DEPARTMENT OF WATER RESOURCES
GROUNDWATER MANAGEMENT SUPPORT SECTION
P O BOX 458, PHOENIX, ARIZONA 85001-0458
PHONE: (602) 417-2470

Arizona Revised Statute §45-594 and A.A.C. R12-822: The owner of an open well shall file a notice of well capping with the Department in writing no later than five days after the well is capped.

NOTICE OF WELL CAPPING

1. LEGAL DESCRIPTION OF THE LOCATION OF WELL:

   a. Township 1

   b. Range 3

   c. Section 1

   A ¼ D ¼ A ¼
   10 Acre 40 Acre 160 Acre

2. WELL REGISTRATION NUMBER:

   55- 801656-1

   File No: A(1-3) 1 ADA

3. OWNER OF THE WELL:
   State of Arizona
   (Arizona State Land Department)
   Name
   1616 West Adams
   Address
   Phoenix AZ 85007
   City State Zip
   (602) 542-3500
   Telephone Number

4. PERSON INSTALLING THE CAP:

   Gutierrez - Palmenberg, Inc.
   Name
   2922 W. Clarendon Avenue
   Address
   Phoenix AZ 85017
   City State Zip
   (602) 234-0696
   Telephone Number

5. DATE WELL WAS CAPPED:

   10-1-98

6. METHOD OF CAPPING:

   Welded

7. TYPE AND DIAMETER OF CASING:

   Type of Well Casing: Steel

   Diameter of Well Casing: 10 inch

   Outer, 6 inch inner

8. COMMENTS

I state that this Notice is filed in compliance with A.R.S. §45-594 and A.A.C. R12-15-822, and is complete and correct to the best of my knowledge and belief.

9. Signature J Dennis Wells Date 10/5/98
   State Land Commissioner

DWR 55-39 (Rev 3/98)

ANSWERED OCT 2 3 1998

ARIZONA DEPARIMENT OF WATER RESOURCES
OPERATIONS DIVISION
15 SOUTH 15TH AVENUE
PHOENIX, ARIZONA 8500

MICROFILMED

CHANGE OF WELL INFORMATION

Well Registration No. 801656 File No. A(1-3)1 ADA
(location)

I/We request the following well information be changed:

Water Use: (DEL) "None" (ADD) "Test"

Well Use: (DEL) "Capped" (ADD) "Monitor"

IPO Status: (DEL) "Cap-2-25-92"

Please Note: This well is now used by Dames & Moor to monitor Motorola's contamination plume.

Date: 1/20/93 Signature of Current Well Owner M J Hassell
State Land Commissioner

(DO NOT CUT THIS FORM IN HALF)

STATEMENT OF CHANGE OF WELL OWNERSHIP

I, _____, state that I am (no longer) the (new)
(please print)
owner of the well described below:

_____1/4_____1/4_____1/4; Section_____ Township_____ Range_____
10 acre 40 acre 160 acre

Well Registration No. 55-_____ File No._____
(location)

PRINT Previous Owner's Name

PRINT New Owner's Name

Address

Address

City State Zip

City State Zip

Dated:_____ Signature of New Owner_____

RECEIVED
FEB - 3 1993

ENTERED FEB - 5 1993

NOTE: A.R.S. §45-593.C. requires that the Department be notified of change of well ownership and that the well owner is required to keep the Department's Well Registration records current and accurate. Well data and ownership changes must be submitted within thirty (30) days after changes take place.

SAVE THIS FORM TO REPORT FUTURE CHANGES IN OWNERSHIP, CHANGES IN ADDRESS, OR CHANGE IN WELL DATA SUCH AS PUMP CAPACITY, CORRECTION OF LEGAL DESCRIPTION, CHANGE OF WELL DRILLER AND AMENDING INFORMATION PREVIOUSLY FILED.

DWR-55-71-11/90

OK

ARIZONA DEPARTMENT OF WATER RESOURCES
OPERATIONS DIVISION
15 SOUTH 15TH AVENUE
PHOENIX, ARIZONA 85007

CHANGE OF WELL INFORMATION

Well Registration No. 55- **801656** File No. **A(1-3)1 ADA**
(location)

I/We request the following well information be changed:

Case diameter: to "10 in."

Date completer: to "5/27/1947"

Date: **8/8/91** Signature of Current Well Owner M J Harrell
State Land Commissioner

(DO NOT CUT THIS FORM IN HALF)

STATEMENT OF CHANGE OF WELL OWNERSHIP ENTERED AUG 19 1991

I, _____, state that I am (no longer) the (new)
(please print)
owner of the well described below:

Township_____ Range_____ Section_____; _____¼ _____¼ _____¼

Well Registration No.55-_____ File No._____
(location)

PRINT Previous Owner's Name PRINT New Owner's Name

Address Address

City State Zip City State Zip

Dated:_____ Signature o

MICROFILMED

NOTE: A.R.S.§45-593.C. requires that the Department be notified of change of well ownership and that the well owner is required to keep the Department's Well Registration records current and accurate. Well data and ownership changes must be submitted within thirty (30) days after changes take place.

SAVE THIS FORM TO REPORT FUTURE CHANGES IN OWNERSHIP, CHANGES IN ADDRESS, OR CHANGE IN WELL DATA SUCH AS PUMP CAPACITY, CORRECTION OF LEGAL DESCRIPTION, CHANGE OF WELL DRILLER AND AMENDING INFORMATION PREVIOUSLY FILED.

AUG 12, 1991

DWR-55-71-3/90

ARIZONA DEPARTMENT OF WATER RESOURCES

15 South 15th Avenue, Phoenix, Arizona 85007
Telephone (602) 542-1553
Fax (602) 256-0506

June 1, 1992

FIFE SYMINGTON
Governor

ELIZABETH ANN RIEKE
Director

Dames & Moore
7500 North Dreamy Draw Drive
Suite 145
Phoenix, Arizona 85020
Attn: Mr. Robert S. Harklaw

A(1-3) 1 ADA

Re: Variance for Capping Existing Non-Exempt Well [redacted] 55-801656
(09448-139-033)
~~D(19-13)27 DB~~

Dear Mr. Harklaw:

Your letter of May 18, 1992 addressed to Mr. Ball asking for Department approval of well capping plans has been referred to me for review and comment regarding meeting Department regulations. The following data was provided in your correspondence:

Letter:	Proposed Design:
Well diameter: 10 inches	Well casing above plate:
Well casing material: steel	6" steel with welded seal and removable cap
Casing depth: 160 feet	Outer casing:
Well Owner: Arizona State Land Department	8" steel extending one foot above base with lock and cap

The Department regulations provide for (1) the installation of a tamper-proof cap by welding a cap to the top of the casing or equipping the well with a pump, and (2) casing or an extension of the casing a minimum of one foot above ground level. A non-exempt well may have the cap secured to the top of the casing with a lock only during temporary periods of (1) well maintenance, (2) modification, or (3) repair; not to exceed 30 days.

The locking provisions of the submitted design; however, appear to meet the tamper resistant watertight requirements of the law. Since the subject well is not listed as a monitor well or piezometer well, but you intend to use it as such, we are granting a variance to the well construction regulations along with the Notice of Well Capping. This variance is approved until such time as you will no longer be utilizing this well as a monitor well. Then restoration to its original state should be performed to meet our regulations. If you have any questions please contact James Goff of my staff at 542-1586.

Thank you for sharing your design concepts with us.

Sincerely,

Greg Wallace
Chief Hydrologist

GW/JG:jw

DAMES & MOORE

POINTE CORPORATE CENTRE, 7500 NORTH DREAMY DRAW DRIVE, SUITE 145, PHOENIX, ARIZONA 85020
(602) 371-1110 FAX: (602) 861-7431

RECEIVED
MAY 22 1992
OPERATIONS DIV.

May 18, 1992

09448-139-033

Arizona Department of Water Resources
15 South 15th Avenue
Phoenix, Arizona 85007

Attention: Mr. Mike Ball

Well Completion Approval for
Arizona State Land Department Well
Motorola 52nd St. Investigation
for Motorola Inc.

55-801656 A(1-3)1 ada

Dear Mr. Ball:

Thank you for discussing well completion issues with me in our phone conversation of May 8, 1992. The following summarizes our conversation.

- Dames & Moore, on behalf of Motorola Inc., seeks permission from the Arizona State Land Department (AZSLD) to sample a well located on Arizona state land.
- The State Land Department requires that a Right-of-Entry (ROE) agreement be reached between Motorola and the AZSLD before accessing and sampling the well.
- The agreement contains several special conditions. One condition that is very important to the AZSLD is that the well be secured properly after each sampling (i.e., tamper proof and water tight).
- Due to the poor condition of the present completion, securing the well after each sampling would be very difficult.
- Dames & Moore, on behalf of Motorola, has proposed to make upgrades to the present well completion so that the well will remain tamper proof and water tight. The AZSLD will allow the upgrades to be made but has mandated that the proposed well completion plans be approved by the Arizona Department of Water Resources (ADWR).

FILE
SUBJECT
SHEET ___ OF ___

VARIANCE GRANTED

4) SECURELY CAP THE 8" PROTECTIVE CASING

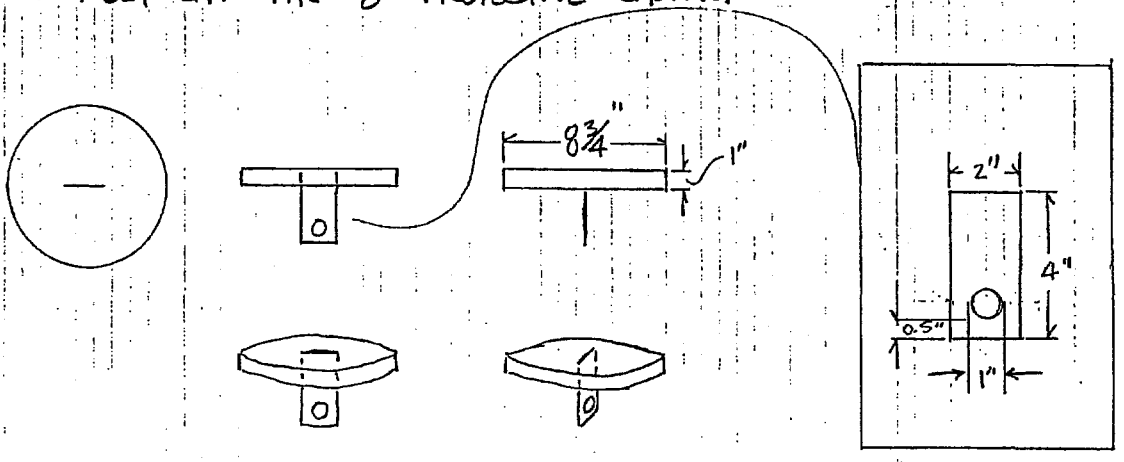

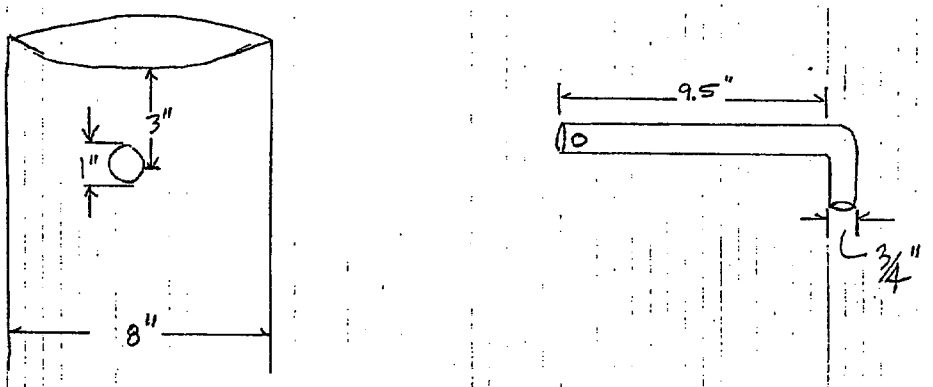

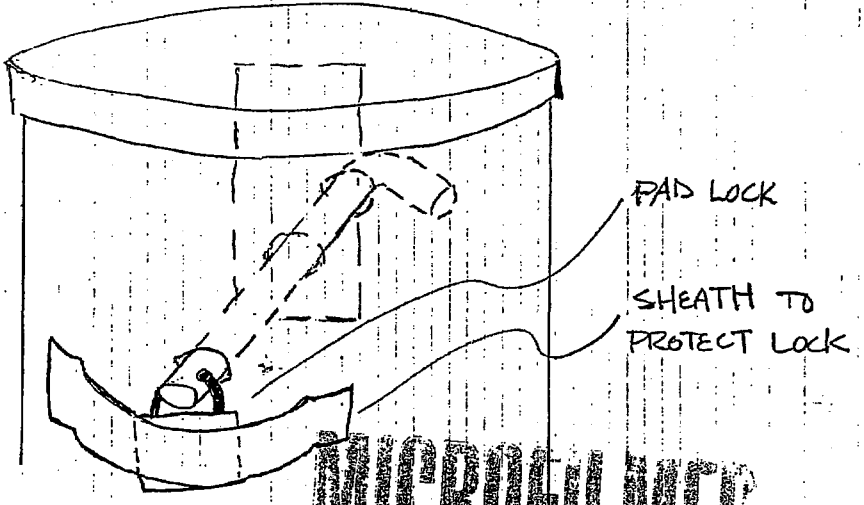

REVISIONS
BY ___ DATE ___ TO EO ___
BY ___ DATE ___ TO EO ___

BY RGH DATE 5/21/92
CHECKED BY
COPY TO EO

MAY 22 1992

MICROFILMED

Dames & Moore

45.1 (12/88) PRINTED IN U.S.A.

FILE _____
SUBJECT _____
SHEET ____ OF ____

VARIANCE GRANTED

REVISIONS
BY _____ DATE _____ TO EO ____
BY _____ DATE _____ TO EO ____

2) CUT OUT A 6" DIAMETER SECTION OF PLATE. WELD INTO PLACE A 6" LENGTH OF 6" DIAMETER CASING. COMPLETE WITH A STANDARD, OVERSHOT, WELL SEAL OR CAP.

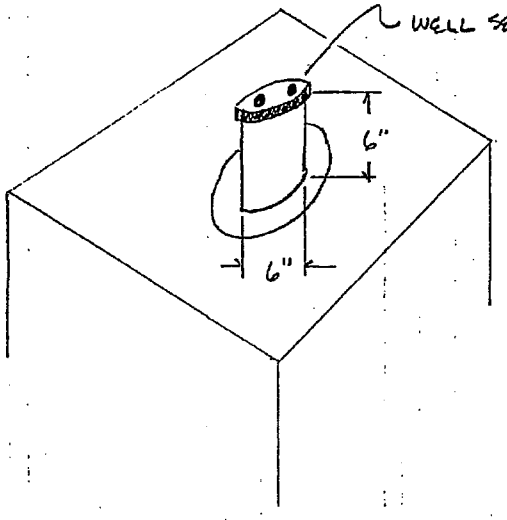

* NOT TO SCALE

3) WELD A ONE FOOT SECTION OF 8" DIAMETER STEEL CASING AROUND THE 6" STEEL CASING

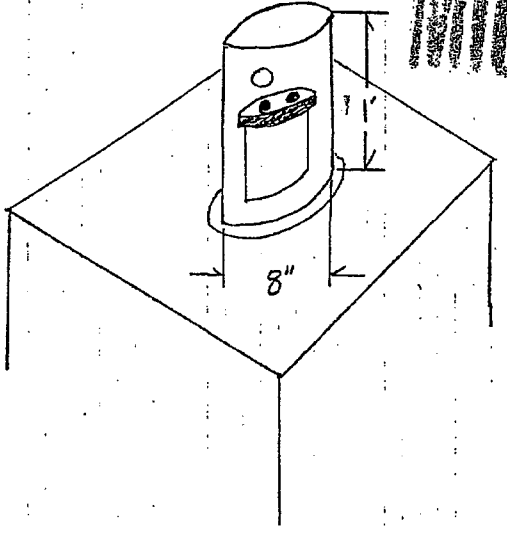

MICROFILMED

MAY 22 1992
REMEDIAL DIV.

BY RJH DATE 5/21/92
CHECKED BY _____
COPY TO EO _____

Dames & Moore

FILE

SUBJECT ARSLD Well @ 40th st. & Moreland

SHEET ___ OF ___

VARIANCE GRANTED

REVISIONS
BY ___ DATE ___ TO EO ___
BY ___ DATE ___ TO EO ___

1) CURRENT WELL COMPLETION

* NOT TO SCALE

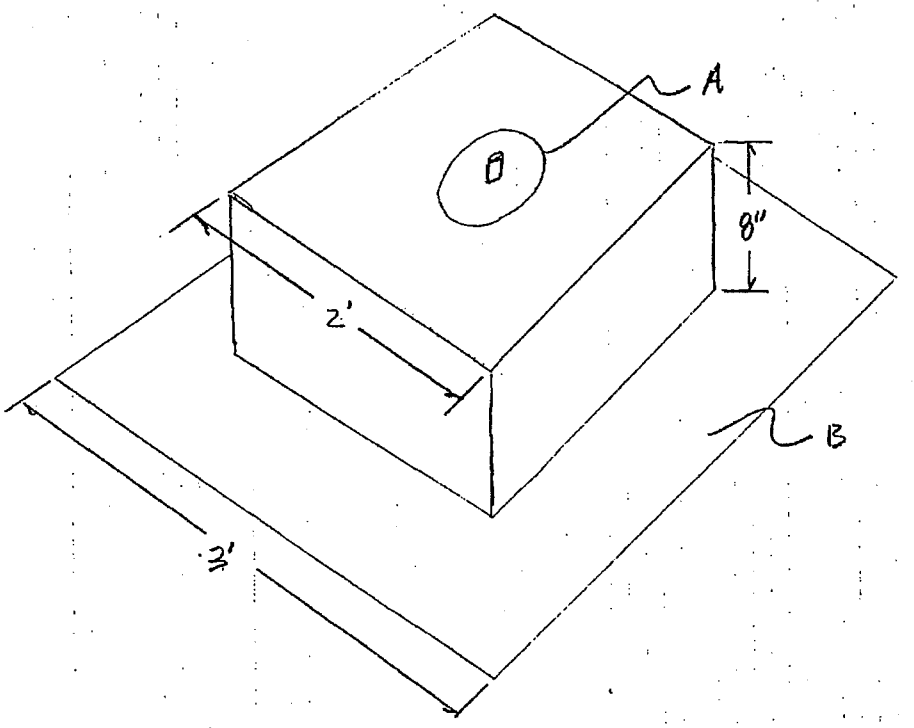

A - TOP OF 10" STEEL WELL CASING. CAPPED WITH A 10" STEEL PLATE CONTAINING A 3/4" SOUNDING PORT.

B - WEATHERED CEMENT BASE PAD DATED 5/27/47. IT LIES FLUSH WITH THE GROUND SURFACE. THE SECONDARY PAD LIES 8" ABOVE THE BASE PAD.

BY Right DATE 5/21/92
CHECKED BY ___
COPY TO EO ___

MAY 22 1992

Dames & Moore

45.1 (12/88) PRINTED IN U.S.A.

ARIZONA DEPARTMENT OF WATER RESOURCES
15 South 15th Avenue
Phoenix, Arizona 85007

NOTICE OF WELL CAPPING

Arizona Revised Statute § 45-594 and A.A.C R12-15-822: The owner of an open well shall file a notice of well capping with the Department in writing no later than five days after the well capping.

David & J. Maher

1. **LEGAL DESCRIPTION OF THE LOCATION OF WELL:**
   1. Township 1 N
   2. Range 3 E
   3. Section 1

   NE 1/4 SE 1/4 NE 1/4

2. **WELL REGISTRATION NUMBER:**

   55-801656

   File No. A(1-3) 1 ADA

   OWNER OF THE WELL:
   State of Arizona
   (Az. State Land Dept.)
   Name

   1616 West Adams
   Address

   Phoenix AZ 85007
   City State Zip

   (602) 542-3500
   Telephone No.

4. **PERSON INSTALLING THE CAP:**

   Maher Environmental, Inc.
   Name

   P. O. Box 1120
   Address

   Tempe AZ 85281
   City State Zip

5. **DATE WELL WAS CAPPED:**
   2/25/1992 10 AM

6. **METHOD OF CAPPING:** #24
   Welded ¼" Plate solid on Id of well casing

7. **TYPE AND DIAMETER OF CASING:**

   Type of well casing:
   Steel

   Diameter of well casing 10 OD

8. **COMMENTS:** Casing Flush with Top of Pad - Trimmed Plate & welded up Solid on Id of Casing.

I state that this Notice is filed in compliance with A.R.S. § 45-594 and A.A.C. R12-15-822, and is complete and correct to the best of my knowledge and belief.

Date 2/28/1992 SIGNATURE: M J Haswell
COMMISSIONER: STATE LAND DEPARTMENT

DWR-55-39-2/90

ENTERED MAR 04 1992

WC 3-3-92

MAR - 3 1992

In our May 8th conversation, we discussed several methods to complete the well so that it would be secured properly. After visiting the well site with a contractor, we drafted the attached completion plans. Please review the plans at your earliest convenience and contact me at (602) 371-1110 if you have any questions or suggestions. If there are no problems, please indicate that the completion plans have been approved by the ADWR so that they may be submitted to the AZSLD.

Thank you for your efforts.

Sincerely,

DAMES & MOORE

Robert G. Harklau
Hydrogeologist

RGH/ks

cc: G. Fisher - MI
JRH
RDB²
LFB
09448-139-033/8.4.1

RECEIVED
MAY 22 1992
OPERATIONS DIV.

MICROFILMED

STATE LAND DEPARTMENT
1624 WEST ADAMS
PHOENIX, ARIZONA 85007

STATE OF ARIZONA
DEPARTMENT OF WATER RESOURCES
WATER RIGHTS ADMINISTRATION
99 EAST VIRGINIA
PHOENIX, ARIZONA 85004

FCA #5

RECEIPT

KIND ENTRY	FILE REFERENCE NO.
55	801656-L
	THRU
55	801658-L

ACCOUNT NO. FUND SOURCE	AGENCY	CHAPTER	DIV.	INT. ACCT.	ITEM DESCRIPTION	RATE	$ AMOUNT
					LATE FEE FOR 2 WELLS @ 10.00 EACH		
					FILING FEE FOR REGISTRATION OF EXISTING WELLS		
					1 EXEMPT WELL 1 NONEXEMPT WELL		
					FILE NO REGISTRATION NO		
					A(1-3)1 ada 801656-L A(1-3)1 ada 801658-L		
					PER FEE CREDIT ACCOUNT ESTABLISHED PURSUANT TO R12-15-152		
					BILL TO STATE LAND DEPARTMENT 30.00		

8-9-84 mg

TOTAL $

DEPARTMENT OF WATER RESOURCES
99 EAST VIRGINIA AVENUE
PHOENIX, ARIZONA 85004

Peterson
23-83900

REGISTRATION OF EXISTING WELLS

READ INSTRUCTIONS ON BACK OF THIS FORM BEFORE COMPLETING
PRINT OR TYPE – FILE IN DUPLICATE

04 07

REGISTRATION FEE (CHECK ONE)	
EXEMPT WELL (NO CHARGE)	☒
NON-EXEMPT WELL – $10.00	☐

FOR OFFICE USE ONLY
REGISTRATION NO. 55- 801658-L
FILE NO. A(1-3)1 ADA
FILED 8-8-84 (DATE) AT AM (TIME)
INA —
AMA Phoenix

1. Name of Registrant:
THE STATE OF ARIZONA - STATE LAND DEPARTMENT
1624 W. ADAMS (Address) PHOENIX (City) ARIZONA (State) 85007 (Zip)

2. File and/or Control Number under previous groundwater law:
_____ (File Number) 35- (Control Number)

3. a. The well is located within the NE ¼ SE ¼ NE ¼, Section 1, of Township 1 North ☒ Range 3 East ☒ G & SRB & M, in the County of Maricopa.

b. If in a subdivision: Name of subdivision _____, Lot No. _____, Address _____.

4. The principal use(s) of water (Examples: irrigation - stockwater - domestic - municipal - industrial)
Not in Use.

5. If for irrigation use, number of acres irrigated from well _____.

6. Owner of land on which well is located. If same as Item 1, check this box ☒
NOT APPLICABLE
(Address) (City) (State) (Zip)

7. Well data (If data not available, write N/A)
a. Depth of Well 40 feet
b. Diameter of casing 6" inches
c. Depth of casing 40 feet
d. Type of casing STEEL.
e. Maximum pump capacity 10 gallons per minute.
f. Depth to water 40 feet below land surface.
g. Date well completed _____ (Month) Prior (Day) 1951 (Year).

RECEIVED AUG 8 1984 DEPT. WATER RESOURCES

8. The place(s) of use of water. If same as Item 3, check this box ☒.
____¼ ____¼ ____¼, Section ____ Township _____ Range _____
____¼ ____¼ ____¼, Section ____ Township _____ Range _____
Attach additional sheet if necessary.

9. DATE June 14, 1982 SIGNATURE OF REGISTRANT Gerald L. Smith
STATE LAND COMMISSIONER

STATE LAND DEPARTMENT
1624 WEST ADAMS
PHOENIX, ARIZONA 85007

STATE OF ARIZONA
DEPARTMENT OF WATER RESOURCES
WATER RIGHTS ADMINISTRATION
99 EAST VIRGINIA
PHOENIX, ARIZONA 85004

RECEIPT

KIND ENTRY	FILE REFERENCE NO.
[illegible]	[illegible]-L
	THRU
[illegible]	[illegible]-L

FCA 25

ACCOUNT NO. FUND SOURCE	AGENCY	CHAPTER	DIV.	INT. ACCT.	ITEM DESCRIPTION	RATE	$ AMOUNT
					LATE FEE FOR 2 WELLS @ 1[illegible].00 EACH		
					FILING FEE FOR REGISTRATION OF EXISTING WELLS		
					1 EXEMPT WELL 1 NONEXEMPT WELL		
					FILE NO REGISTRATION NO		
					A(1-3)1 ada [illegible]-L A(1-3)1 ada [illegible]-L		
					PUB FEE CREDIT ACCOUNT ESTABLISHED PURSUANT TO W12-15-152		
					BILL TO STATE LAND DEPARTMENT 30.[illegible]		

8-9-84 [illegible]

TOTAL $

ARIZONA DEPARTMENT OF WATER RESOURCES
15 South 15th Avenue
Phoenix, Arizona 85007

NOTICE OF WELL CAPPING

Arizona Revised Statute § 45-594 and A.A.C R12-15-822: The owner of an open well shall file a notice of well capping with the Department in writing no later than five days after the well capping.

1. **LEGAL DESCRIPTION OF THE LOCATION OF WELL:**

   1. Township 1 N
   2. Range 3 E
   3. Section 1

   NE 1/4 SE 1/4 NE 1/4

2. **WELL REGISTRATION NUMBER:**

   55-801658

   File No. A(1-3) 1 ADA

   OWNER OF THE WELL:
   State of Arizona
   (Az. State Land Dept.)
   Name

   1616 West Adams
   Address

   Phoenix AZ 85007
   City State Zip

   (602) 542-3500
   Telephone No.

4. **PERSON INSTALLING THE CAP:**

   Maher Environmental, Inc.
   Name

   P. O. Box 1120
   Address

   Tempe AZ 85281
   City State Zip

5. **DATE WELL WAS CAPPED:** David & J. Mathes
   2/28/1992 10 AM

6. **METHOD OF CAPPING:** #23
   Trimmed casing & welded 1/4" Plate Solid

7. **TYPE AND DIAMETER OF CASING:**

   Type of well casing:
   Steel
   Diameter of well casing 6 OD

8. **COMMENTS:** Well casing was 13" below grade - uncovered & Trimmed off 3". Now 16" below grade & Casing Filled with dirt To within 3" of Top

I state that this Notice is filed in compliance with A.R.S. § 45-594 and A.A.C. R12-15-822, and is complete and correct to the best of my knowledge and belief.

Date 2/28/1992 SIGNATURE: M J Maher

COMMISSIONER: STATE LAND DEPARTMENT

DWR-55-39-2/90

ENTERED MAR 04 1992

MAR - 3 1992

LEGAL DIV.

APPENDIX D

TRACK ➤ INFO SERVICES, LLC

Environmental FirstSearch™ Report

TARGET PROPERTY:

3705 E MCDOWELL ROAD

PHOENIX AZ 85008

Job Number: 02-0021B

PREPARED FOR:

GEC-SA&B

2801 S. 35th St.

Phoenix, AZ 85034

12-27-06

Tel: (866) 664-9981 *Fax: (818) 249-4227*

Environmental FirstSearch is a registered trademark of FirstSearch Technology Corporation. All rights reserved.

Environmental FirstSearch
Search Summary Report

Target Site: 3705 E MCDOWELL ROAD
PHOENIX AZ 85008

FirstSearch Summary

Database	Sel	Updated	Radius	Site	1/8	1/4	1/2	1/2>	ZIP	TOTALS
NPL	Y	10-09-06	1.00	1	0	0	0	1	0	2
NPL Delisted	Y	10-09-06	0.50	0	0	0	0	-	0	0
CERCLIS	Y	11-08-06	0.50	0	0	0	0	-	0	0
NFRAP	Y	11-08-06	0.50	0	0	1	0	-	0	1
RCRA COR ACT	Y	04-16-06	1.00	0	0	0	0	0	0	0
RCRA TSD	Y	04-16-06	0.50	0	0	0	0	-	0	0
RCRA GEN	Y	04-16-06	0.05	0	1	-	-	-	0	1
RCRA NLR	Y	04-16-06	0.05	0	0	-	-	-	0	0
Federal IC / EC	Y	11-14-06	0.05	0	0	-	-	-	1	1
ERNS	Y	12-31-05	0.05	0	1	-	-	-	0	1
Tribal Lands	Y	12-01-05	1.00	0	0	0	0	0	0	0
State/Tribal Sites	Y	08-25-04	1.00	1	0	0	0	0	0	1
State Spills 90	Y	12-11-01	0.05	0	0	-	-	-	0	0
State/Tribal SWL	Y	04-30-05	0.50	0	0	0	0	-	0	0
State/Tribal LUST	Y	05-31-05	0.50	0	1	1	6	-	0	8
State/Tribal UST/AST	Y	05-31-05	0.05	0	2	-	-	-	0	2
State/Tribal EC	Y	NA	0.05	0	0	-	-	-	0	0
State/Tribal IC	Y	03-07-06	0.05	0	1	-	-	-	0	1
State/Tribal VCP	Y	NA	0.05	0	0	-	-	-	0	0
State/Tribal Brownfields	Y	03-07-06	0.50	0	0	0	0	-	0	0
State Permits	Y	09-22-05	0.05	0	2	-	-	-	0	2
State Other	Y	11-16-04	0.50	0	0	1	0	-	0	1
- TOTALS -				2	8	3	6	1	1	2

Notice of Disclaimer

Due to the limitations, constraints, inaccuracies and incompleteness of government information and computer mapping data currently available to TRACK Info Services, certain conventions have been utilized in preparing the locations of all federal, state and local agency sites residing in TRACK Info Services's databases. All EPA NPL and state landfill sites are depicted by a rectangle approximating their location and size. The boundaries of the rectangles represent the eastern and western most longitudes; the northern and southern most latitudes. As such, the mapped areas may exceed the actual areas and do not represent the actual boundaries of these properties. All other sites are depicted by a point representing their approximate address location and make no attempt to represent the actual areas of the associated property. Actual boundaries and locations of individual properties can be found in the files residing at the agency responsible for such information.

Waiver of Liability

Although TRACK Info Services uses its best efforts to research the actual location of each site, TRACK Info Services does not and can not warrant the accuracy of these sites with regard to exact location and size. All authorized users of TRACK Info Services's services proceeding are signifying an understanding of TRACK Info Services's searching and mapping conventions, and agree to waive any and all liability claims associated with search and map results showing incomplete and or inaccurate site locations.

Environmental FirstSearch
Site Information Report

Request Date:	12-27-06	**Search Type:**	AREA
Requestor Name:	phyllis rettke	**Job Number:**	02-0021B
Standard:	ASTM-05		**Filtered Report**

TARGET ADDRESS: 3705 E MCDOWELL ROAD
PHOENIX AZ 85008

Demographics

Sites:	21	**Non-Geocoded:**	1	**Population:**	NA
Radon:	0.4 - 3.4 PCI/L				

Site Location

	Degrees (Decimal)	Degrees (Min/Sec)		UTMs
Longitude:	-111.999564	-111:59:58	**Easting:**	407110.653
Latitude:	33.462	33:27:43	**Northing:**	3702760.309
			Zone:	12

Comment

Comment:

Additional Requests/Services

Adjacent ZIP Codes: 5 Mile(s)

ZIP Code	City Name	ST	Dist/Dir	Sel
85003	PHOENIX	AZ	4.02 NW	N
85004	PHOENIX	AZ	3.53 SW	N
85006	PHOENIX	AZ	1.51 SW	N
85007	PHOENIX	AZ	4.53 SW	N
85012	PHOENIX	AZ	3.73 NW	N
85013	PHOENIX	AZ	4.21 NW	N
85014	PHOENIX	AZ	2.80 NW	N
85016	PHOENIX	AZ	1.27 NW	N
85018	PHOENIX	AZ	1.01 NW	N
85034	PHOENIX	AZ	0.49 SW	N
85040	PHOENIX	AZ	2.49 SW	N
85041	PHOENIX	AZ	4.71 SW	N
85042	PHOENIX	AZ	4.52 SW	N
85251	SCOTTSDALE	AZ	2.40 NE	N
85253	PARADISE VALLEY	AZ	3.30 NE	N

More Additional Zip Code exist...

Services:

	Requested?	Date
Sanborns	No	
Aerial Photographs	No	
Historical Topos	No	
City Directories	No	
Title Search/Env Liens	No	
Municipal Reports	No	
Online Topos	No	

Environmental FirstSearch
Sites Summary Report

TARGET SITE: 3705 E MCDOWELL ROAD
PHOENIX AZ 85008

JOB: 02-0021B

TOTAL: 21 **GEOCODED:** 20 **NON GEOCODED:** 1 **SELECTED:** 21

Page No.	DB Type	Site Name/ID/Status	Address	Dist/Dir	Map ID
1	NPL	MOTOROLA, INC. (52ND STREET PLANT) AZD009004177/FINAL	5005 E MCDOWELL RD PHOENIX AZ 85008	0.00 --	2
3	STATE	MOTOROLA 52ND STREET NPL_26/NPL	PHOENIX AZ	0.00 --	6
4	PERMITS	DIAMOND SHAMROCK STORE 13421	3980 EAST MCDOWELL ROAD PHOENIX AZ 85008	0.01 NE	8
7	UST	DIAMOND SHAMROCK # 1635 0-009131	3980 E MCDOWELL PHOENIX AZ 85008	0.01 NE	8
9	ERNS	UNKNOWN 205200/UNKNOWN (NRC)	1225 N. 40TH ST PHOENIX AZ 85008	0.01 SE	5
11	INSTCONTROL	7-ELEVEN #21889 DEURS16527	4002 E MCDOWELL RD PHOENIX AZ 85008	0.04 NE	9
12	LUST	7-ELEVEN # 21889 0-004654	4002 E MCDOWELL RD PHOENIX AZ 85008	0.04 NE	9
13	UST	7-ELEVEN # 21889 / SOUTHLAND 0-004654	4002 E MCDOWELL RD PHOENIX AZ 85008	0.04 NE	9
15	PERMITS	ARROWOOD VILLAGE APARTMENTS 17258.00	4038 E. MCDOWELL RD. PHOENIX AZ 85008	0.05 NE	7
20	RCRAGN	ALPINE CLEANERS AZD981676927/SGN	1638 N 40TH ST PHOENIX AZ 85008	0.05 NE	4
21	NFRAP	PRECISION MECHANICAL AZD983471053/NFRAP-N	1610 N. 41ST PLACE PHOENIX AZ 85008	0.19 NE	3
21	OTHER	PRECISION MECHANICAL 877/PA/SI	1610 N. 41ST PLACE PHOENIX AZ 85008	0.19 NE	3
22	LUST	J & S SERVICE CENTER 0-010038	4226 E MCDOWELL RD PHOENIX AZ 85008	0.24 NE	10
23	LUST	UNOCAL # 6062 0-005313	4352 E MCDOWELL RD PHOENIX AZ 85008	0.45 NE	16
24	LUST	ARCO # 6009 0-000501	4357 E MCDOWELL RD PHOENIX AZ 85008	0.46 NE	12
25	LUST	UNOCAL # 5974 0-006643	4002 E VAN BUREN PHOENIX AZ 85008	0.48 SE	15
26	LUST	ALL STAR CAR WASH 0-001158	3232 E MCDOWELL RD PHOENIX AZ 85008	0.49 NW	11
27	LUST	MOBIL 18-KEA 0-003230	4402 E MCDOWELL RD PHOENIX AZ 85008	0.50 NE	14
28	LUST	CIRCLE K STORE #2701344 0-001396	1002 N 32ND ST PHOENIX AZ 85008	0.50 NW	13
28	NPL	GARRETT TURBINE ENGINE CO AZD009000050/PART OF NPL	111 S 34TH ST. PHOENIX AZ	0.78 SW	1

Environmental FirstSearch
Sites Summary Report

TARGET SITE: 3705 E MCDOWELL ROAD
PHOENIX AZ 85008

JOB: 02-0021B

TOTAL: 21 **GEOCODED:** 20 **NON GEOCODED:** 1 **SELECTED:** 21

Page No.	DB Type	Site Name/ID/Status	Address	Dist/Dir	Map ID
29	FEDBROWNFIELD	MOTOROLA, INC. (52ND STREET PLANT) AZD009004177-EC/EPA ENG CONTROL	5005 E MCDOWELL RD PHOENIX AZ 85008	NON GC	

Environmental FirstSearch
Site Detail Report

TARGET SITE: 3705 E MCDOWELL ROAD
PHOENIX AZ 85008

JOB: 02-0021B

NPL SITE

SEARCH ID: 2 **DIST/DIR:** 0.00 -- **MAP ID:** 2

NAME:	MOTOROLA, INC. (52ND STREET PLANT)	**REV:**	10/9/06
ADDRESS:	5005 E MCDOWELL RD	**ID1:**	AZD009004177
	PHOENIX AZ 85008	**ID2:**	0900517
		STATUS:	FINAL
CONTACT:	DON (OSC) ZUROSKI	**PHONE:**	

SITE INFORMATION

EVENT TYPE

SITE DISCOVERY BY:	EPA	**DISCOVERY DATE:**	08-01-80
SITE PROPOSED BY:	EPA	**PROPOSED DATE:**	10-15-84
FINAL LIST BY:	EPA	**FINAL LIST DATE:**	10-04-89

ACTIVITIES: MANUFACTURES SEMICONDUCTORS & RELATED COMPONENTS

CONTAMINANTS: VOCS
SOURCE OF CONTAMINATION: LEAKING UNDERGROUND STORAGE TANK

CONTAMINATED: GROUNDWATER,SOIL,SOIL GAS
THREATENED:

SITE DESCRIPTION

Conditions at proposal (October 15, 1984): Motorola, Inc., manufactures semiconductors and related components at a plant on 52nd Street in Phoenix, Maricopa County, Arizona. The facility is situated approximately 1.5 miles northeast of the Sky Harbor International Airport and is surrounded by residential, industrial, business, agricultural, and recreational areas.

Ground water beneath the 52nd Street Plant is contaminated with trichloroethylene (TCE), trichloroethane (TCA), and other organic and inorganic compounds, according to analyses conducted by EPA and Motorola. Contamination may have resulted from leaking storage tanks, leaking effluent lines, and past disposal practices, including the use of dry wells. Motorola detected TCE and TCA in its monitoring wells at least I mile from the facility. Several private wells not used for drinking and one irrigation well contain TCE above the State action level of 5 parts per billion.

Prior to October 1983, Motorola installed 22 on-site and 6 off-site monitoring wells, as described in a Phase I remedial investigation report. In October 1983, the Arizona Department of Health Services established a Task Force comprised of the State, EPA, and local agencies. The Task Force has guided Motorola in developing a detailed workplan for a remedial investigation/ feasibility study (RI/FS) to determine the type and extent of contamination at the site and identify alternatives for remedial action.

The plant received Interim Status under Subtitle C of the Resource Conservation and Recovery Act (RCRA) when the company filed Part A of a permit application.

Status (January 1986): Motorola has completed most field activities for Phase II of the RI/FS. The report is expected in 1986. Off-site sampling has confirmed a plume of contaminated ground water extending at least 1 mile west of the plant. In 1986, additional monitoring wells will be installed, ground water and soil will be tested, and a pilot plant for pumping and treating contaminated ground water will be installed.

Status (June 24, 1988): EPA is proposing to place this previously proposed RCRA site on the final NPL. On May 19, 1986, Motorola requested that the facility be converted to a hazardous waste generator. On July 29, 1986, EPA confirmed that the plant was operating as a generator. Hence, it satisfies a component of EPA s NPL/RCRA policy.

In May 1986, the State certified that a container storage area on-site had been cleaned up in accordance with Subtitle C.

Status (October 4, 1989): EPA has placed this site on the NPL.

- Continued on next page -

Environmental FirstSearch
Site Detail Report

TARGET SITE: 3705 E MCDOWELL ROAD
PHOENIX AZ 85008

JOB: 02-0021B

NPL SITE

SEARCH ID: 2 **DIST/DIR:** 0.00 -- **MAP ID:** 2

NAME:	MOTOROLA, INC. (52ND STREET PLANT)	**REV:**	10/9/06
ADDRESS:	5005 E MCDOWELL RD	**ID1:**	AZD009004177
	PHOENIX AZ 85008	**ID2:**	0900517
		STATUS:	FINAL
CONTACT:	DON (OSC) ZUROSKI	**PHONE:**	

Following public comment on Motorola s RI/FS, a Record of Decision was signed in September 1988 finalizing the remedy for the first phase of the response. Work is scheduled to begin in late 1990. Motorola and the State signed a Consent Decree in June 1989 and stipulated penalties for the remedial design and remedial action.

FINAL DATE: 10/04/1989

Environmental FirstSearch
Site Detail Report

TARGET SITE: 3705 E MCDOWELL ROAD
PHOENIX AZ 85008

JOB: 02-0021B

STATE

SEARCH ID: 6 **DIST/DIR:** 0.00 -- **MAP ID:** 6

NAME: MOTOROLA 52ND STREET
ADDRESS:
PHOENIX AZ
CONTACT:

REV: 08/25/00
ID1: NPL_26
ID2:
STATUS: NPL
PHONE:

REGISTRY SITE INFORMATION:

WQARF CODE:	*047*
SUPRFUND_ID (note agency has duplicate id s)	*25*
ABB:	*M52*
AREA (in acres):	*15117174*
PERIMETER (in meters):	*25870.832*

SITE STATUS:

SITE BOUNDARIES:

BACKGROUND:

CONTAMINANTS:

PUBLIC HEALTH IMPACT:

COMMUNITY INVOLVEMENT:

INFORMATION REPOSITORY:

REGISTRY REPORT:

CONTACTS:

TARGET SITE: 3705 E MCDOWELL ROAD
PHOENIX AZ 85008

JOB: 02-0021B

PERMITS SITE

SEARCH ID: 8 **DIST/DIR:** 0.01 NE **MAP ID:** 8

NAME: DIAMOND SHAMROCK STORE
ADDRESS: 3980 EAST MCDOWELL ROAD
PHOENIX, AZ AZ 85008

CONTACT: PETER DE KREY

REV: 05/07/98
ID1: 13421
ID2:
STATUS:
PHONE:

TOTAL NUMBER OF DRY WELLS AT PROPERTY: *2*

THE FOLLOWING IS INFORMATION REGARDING DRY WELL NUMBER: *1*

GENERAL INFORMATION
REGISTRATION KEY: *13421*
OWNER ID: *1*
BUSINESS CODE: *10*
OTHER BUSINESS: *ABANDONED BANK BLDG*

DRY WELL STATUS: *ACTIVE*
OTHER DRY WELL STATUS:
DRY WELL PENETRATE GROUNDWATER (?): *N*

TOWNSHIP/RANGE/SECTION: *2N3E36*
QUARTER SECTION: *SE,SE,SE,SE*
SITE PLAN SENT: *Y*
FEE: *20*

COMPLIANCE STATUS REGARDING REGISTRATION
DRY WELL STATUS CHANGE:

REQUESTS BY ADEQ REGARDING REGISTRATRION (X = YES)
INCOMPLETE SUBMITTAL:
APP DETERMINATION:
APP REQUIRED:
FUTURE APP REQUIRED:
MANAGEMENT PRACTICE PLAN:
DRILLERS LOG:

ADDITIONAL FEE NEEDED:
REQUEST DATE:
SECOND REQUEST FOR INFO:
ENTRY DATE: *07-FEB-97*
PROJECT OFFICER: *102*

DRAINAGE AREAS (X = YES)
DRIVEWAY: *X*
ROOFTOP: *X*
STREET:
GENERAL LOADING DOCKS:
HAZARDOUS LOADING DOCKS:
CHEMICAL STORAGE:
LIVESTOCK:
AGRICULTURAL:
OTHER DRAINAGE LOCATION:

- Continued on next page -

TARGET SITE: 3705 E MCDOWELL ROAD
PHOENIX AZ 85008

JOB: 02-0021B

PERMITS SITE

SEARCH ID: 8 **DIST/DIR:** 0.01 NE **MAP ID:** 8

NAME: DIAMOND SHAMROCK STORE
ADDRESS: 3980 EAST MCDOWELL ROAD
PHOENIX, AZ AZ 85008

CONTACT: PETER DE KREY

REV: 05/07/98
ID1: 13421
ID2:
STATUS:
PHONE:

OTHER FLUIDS RECEIVED BY WELL:

DRILLER/HAZARDOUS SUBSTANCE INFORMATION (X = YES)
DRY WELL COMPLETE:
DEPTH OF HOLE:
DRILLER CODE:
HAZARDOUS STORAGE:
OTHER DRAINAGE:
OTHER DRAINAGE DESCRIPTION:
DRY WELL INVESTIGATION:

FACILITY CONTACT INFORMATION
CONTACT PERSON: *PETER DE KREY*
CONTACT PERSON TITLE: *PRESIDENT*
CONTACT PERSON ADDRESS:

CONTACT PERSON PHONE:

PROPERTY OWNER INFORMATION
PROPERTY OWNER: *DIGITAL MASTERS LIBRARY CORP.*
PROPERTY OWNER ADDRESS: *1433 E. REDMON DRIVE*
TEMPE, AZ 85283
PROPERTY OWNER PHONE:

TOTAL NUMBER OF DRY WELLS AT PROPERTY: *2*

THE FOLLOWING IS INFORMATION REGARDING DRY WELL NUMBER: *2*

GENERAL INFORMATION
REGISTRATION KEY: *13421*
OWNER ID: *2*
BUSINESS CODE: *10*
OTHER BUSINESS: *ABANDONED BANK BLDG*

DRY WELL STATUS: *ACTIVE*
OTHER DRY WELL STATUS:
DRY WELL PENETRATE GROUNDWATER (?): *N*

TOWNSHIP/RANGE/SECTION: *2N3E36*
QUARTER SECTION: *SE,SE,SE,SE*
SITE PLAN SENT: *Y*
FEE: *20*

COMPLIANCE STATUS REGARDING REGISTRATION
DRY WELL STATUS CHANGE:

- Continued on next page -

Environmental FirstSearch
Site Detail Report

TARGET SITE: 3705 E MCDOWELL ROAD
PHOENIX AZ 85008

JOB: 02-0021B

PERMITS SITE

SEARCH ID: 8 **DIST/DIR:** 0.01 NE **MAP ID:** 8

NAME: DIAMOND SHAMROCK STORE
ADDRESS: 3980 EAST MCDOWELL ROAD
PHOENIX, AZ AZ 85008
CONTACT: PETER DE KREY

REV: 05/07/98
ID1: 13421
ID2:
STATUS:
PHONE:

REQUESTS BY ADEQ REGARDING REGISTRATRION (X = YES)
INCOMPLETE SUBMITTAL:
APP DETERMINATION:
APP REQUIRED:
FUTURE APP REQUIRED:
MANAGEMENT PRACTICE PLAN:
DRILLERS LOG:

ADDITIONAL FEE NEEDED:
REQUEST DATE:
SECOND REQUEST FOR INFO:
ENTRY DATE: *07-FEB-97*
PROJECT OFFICER: *102*

DRAINAGE AREAS (X = YES)
DRIVEWAY: *X*
ROOFTOP: *X*
STREET:
GENERAL LOADING DOCKS:
HAZARDOUS LOADING DOCKS:
CHEMICAL STORAGE:
LIVESTOCK:
AGRICULTURAL:
OTHER DRAINAGE LOCATION:
OTHER FLUIDS RECEIVED BY WELL:

DRILLER/HAZARDOUS SUBSTANCE INFORMATION (X = YES)
DRY WELL COMPLETE:
DEPTH OF HOLE:
DRILLER CODE:
HAZARDOUS STORAGE:
OTHER DRAINAGE:
OTHER DRAINAGE DESCRIPTION:
DRY WELL INVESTIGATION:

FACILITY CONTACT INFORMATION
CONTACT PERSON: *PETER DE KREY*
CONTACT PERSON TITLE: *PRESIDENT*
CONTACT PERSON ADDRESS:

CONTACT PERSON PHONE:

PROPERTY OWNER INFORMATION
PROPERTY OWNER: *DIGITAL MASTERS LIBRARY CORP.*
PROPERTY OWNER ADDRESS: *1433 E. REDMON DRIVE*

- Continued on next page -

Environmental FirstSearch
Site Detail Report

TARGET SITE: 3705 E MCDOWELL ROAD
PHOENIX AZ 85008

JOB: 02-0021B

PERMITS SITE

SEARCH ID: 8 **DIST/DIR:** 0.01 NE **MAP ID:** 8

NAME: DIAMOND SHAMROCK STORE
ADDRESS: 3980 EAST MCDOWELL ROAD
PHOENIX, AZ AZ 85008
CONTACT: PETER DE KREY

REV: 05/07/98
ID1: 13421
ID2:
STATUS:
PHONE:

TEMPE, AZ 85283

PROPERTY OWNER PHONE:

TARGET SITE: 3705 E MCDOWELL ROAD
PHOENIX AZ 85008

JOB: 02-0021B

REGISTERED UNDERGROUND STORAGE TANKS

SEARCH ID: 11 **DIST/DIR:** 0.01 NE **MAP ID:** 8

NAME:	DIAMOND SHAMROCK # 1635	**REV:**	01/14/00
ADDRESS:	3980 E MCDOWELL	**ID1:**	0-009131
	PHOENIX AZ 85008	**ID2:**	
	MARICOPA	**STATUS:**	
CONTACT:	SANDY HUFF OPERATIONS & ENV SPE	**PHONE:**	

TANK NUMBER: 1
TANK ACTIVITY STATUS: YES
STATUS: ACTV
DATE INSTALLED: 01/01/1997
DATE REMOVED:
DATE CLOSED: / /
WHAT IS / WAS TANK CONTENT: Gasoline

TANK CHARACTERISTICS:
TANK SIZE IN GALLONS: 15000
TANK MATERIAL: Composite (Steel with Fiberglass) Double-Walled
TANK RELEASE DETECTION SYSTEM: Sir

PIPE CHARACTERISTICS:
PIPE MATERIAL: Double-Walled Fiberglass Reinforced Plastic
PIPE TYPE FLOW: Pressure

PIPE RELEASE DETECTION SYSTEM:
Automatic Line Leak Detectors

OWNER INFORMATION:
OWNER ID NUMBER: 5464
OWNER NAME: DIAMOND SHAMROCK ARIZONA, INC
OWNER ADDRESS: PO Box 69600 San Antonio, TX 78269

TANK NUMBER: 2
TANK ACTIVITY STATUS: YES
STATUS: ACTV
DATE INSTALLED: 01/01/1997
DATE REMOVED:
DATE CLOSED: / /
WHAT IS / WAS TANK CONTENT: Gasoline

TANK CHARACTERISTICS:
TANK SIZE IN GALLONS: 12000
TANK MATERIAL: Composite (Steel with Fiberglass) Double-Walled
TANK RELEASE DETECTION SYSTEM: Sir

PIPE CHARACTERISTICS:
PIPE MATERIAL: Double-Walled Fiberglass Reinforced Plastic
PIPE TYPE FLOW: Pressure

PIPE RELEASE DETECTION SYSTEM:
Automatic Line Leak Detectors

- Continued on next page -

Environmental FirstSearch
Site Detail Report

TARGET SITE: 3705 E MCDOWELL ROAD
PHOENIX AZ 85008

JOB: 02-0021B

REGISTERED UNDERGROUND STORAGE TANKS

SEARCH ID: 11 **DIST/DIR:** 0.01 NE **MAP ID:** 8

NAME:	DIAMOND SHAMROCK # 1635	**REV:**	01/14/00
ADDRESS:	3980 E MCDOWELL	**ID1:**	0-009131
	PHOENIX AZ 85008	**ID2:**	
	MARICOPA	**STATUS:**	
CONTACT:	SANDY HUFF OPERATIONS & ENV SPE	**PHONE:**	

OWNER INFORMATION:

OWNER ID NUMBER:	5464
OWNER NAME:	DIAMOND SHAMROCK ARIZONA, INC
OWNER ADDRESS:	PO Box 69600 San Antonio, TX 78269

TARGET SITE: 3705 E MCDOWELL ROAD
PHOENIX AZ 85008

JOB: 02-0021B

EMERGENCY RESPONSE NOTIFICATION SITE

SEARCH ID: 5 **DIST/DIR:** 0.01 SE **MAP ID:** 5

NAME: UNKNOWN
ADDRESS: 1225 N. 40TH ST
PHOENIX AZ
CONTACT:

REV: 2/19/91
ID1: 205200
ID2:
STATUS: UNKNOWN (NRC)
PHONE:

SPILL INFORMATION
DATE OF SPILL: 2/19/1991 **TIME OF SPILL:** 1300

PRODUCT RELEASED (1): FLUOBORIC ACID
QUANTITY (1): 10
UNITS (1): GAL

PRODUCT RELEASED (2):
QUANTITY (2):
UNITS (2):

PRODUCT RELEASED (3):
QUANTITY (3):
UNITS (3):

MEDIUM/MEDIA AFFECTED

AIR:	NO	**GROUNDWATER:**	NO
LAND:	YES	**FIXED FACILITY:**	NO
WATER:	NO	**OTHER:**	NO

WATERBODY AFFECTED BY RELEASE: NONE

SPILL INFORMATION
DATE OF SPILL: 2/19/1991 **TIME OF SPILL:** 1300

PRODUCT RELEASED (1): FLUOBORIC ACID
QUANTITY (1): 10
UNITS (1): GAL

PRODUCT RELEASED (2):
QUANTITY (2):
UNITS (2):

PRODUCT RELEASED (3):
QUANTITY (3):
UNITS (3):

MEDIUM/MEDIA AFFECTED

AIR:	NO	**GROUNDWATER:**	NO
LAND:	YES	**FIXED FACILITY:**	NO
WATER:	NO	**OTHER:**	NO

WATERBODY AFFECTED BY RELEASE: NONE

CAUSE OF RELEASE

DUMPING:	YES	**EQUIPMENT FAILURE:**	NO
NATURAL PHENOMENON:	NO	**OPERATOR ERROR:**	NO
OTHER CAUSE:	NO	**TRANSP. ACCIDENT:**	NO
UNKNOWN:	NO		

- Continued on next page -

Environmental FirstSearch
Site Detail Report

TARGET SITE: 3705 E MCDOWELL ROAD
PHOENIX AZ 85008

JOB: 02-0021B

EMERGENCY RESPONSE NOTIFICATION SITE

SEARCH ID: 5 **DIST/DIR:** 0.01 SE **MAP ID:** 5

NAME: UNKNOWN
ADDRESS: 1225 N. 40TH ST
PHOENIX AZ
CONTACT:

REV: 2/19/91
ID1: 205200
ID2:
STATUS: UNKNOWN (NRC)
PHONE:

ACTIONS TAKEN: TAT ISSUED EPA# FOR REMOVAL
RELEASE DETECTION: ILLEGAL DUMPING
MISC. NOTES: * REFERRED: DISPOSAL CONTROL, INC.

DISCHARGER INFORMATION
DISCHARGER ID: 205200 **DUN & BRADSTREET #:**
TYPE OF DISCHARGER:
NAME OF DISCHARGER: UNKNOWN
ADDRESS:

CAUSE OF RELEASE

DUMPING:	YES	**EQUIPMENT FAILURE:**	NO
NATURAL PHENOMENON:	NO	**OPERATOR ERROR:**	NO
OTHER CAUSE:	NO	**TRANSP. ACCIDENT:**	NO
UNKNOWN:	NO		

ACTIONS TAKEN: TAT ISSUED EPA# FOR REMOVAL
RELEASE DETECTION: ILLEGAL DUMPING
MISC. NOTES: * REFERRED: DISPOSAL CONTROL, INC.

DISCHARGER INFORMATION
DISCHARGER ID: 205200 **DUN & BRADSTREET #:**
TYPE OF DISCHARGER:
NAME OF DISCHARGER: UNKNOWN
ADDRESS:

Environmental FirstSearch
Site Detail Report

TARGET SITE: 3705 E MCDOWELL ROAD
PHOENIX AZ 85008

JOB: 02-0021B

INST CONTROL

SEARCH ID: 20 **DIST/DIR:** 0.04 NE **MAP ID:** 9

NAME:	7-ELEVEN #21889	**REV:**	03/07/06
ADDRESS:	4002 E MCDOWELL RD	**ID1:**	DEURS16527
	PHOENIX AZ 85008	**ID2:**	
	MARICOPA	**STATUS:**	
CONTACT:		**PHONE:**	

ARIZONA DEPARTMENT OF ENVIRONMENTAL QUALITY DEURS PROGRAM SITE INFORMATION:

GENERAL INFORMATION

Program:	*LEAKING UNDERGROUND STORAGE TANK PROGRAM*
Program File Number:	*UST3795.01*
Site Type:	*OTHER*
Remediation Level Achieved:	*HBGL Residential*
Remediation Start Date:	*10/31/1997*
Remediation End Date:	*10/31/1997*
DEUR Record Date:	
WPD Approval Date for DEUR:	
VEMUR Record Date:	

CONTAMINANT INFORMATION

Standard Type:	*HEALTH-BASED GUIDANCE LEVEL*
Contaminant:	*BENZENE (BNZ)*
Concentration (in Mg/Kg):	*1*
Depth (in ft):	*4*
Standard Type:	*HEALTH-BASED GUIDANCE LEVEL*
Contaminant:	*TOTAL PETROLEUM HYDROCARBONS (TPH)*
Concentration (in Mg/Kg):	*350*
Depth (in ft):	*4*
Standard Type:	
Contaminant:	
Concentration (in Mg/Kg):	
Depth (in ft):	
Standard Type:	
Contaminant:	
Concentration (in Mg/Kg):	
Depth (in ft):	
Standard Type:	
Contaminant:	
Concentration (in Mg/Kg):	
Depth (in ft):	
Standard Type:	
Contaminant:	
Concentration (in Mg/Kg):	
Depth (in ft):	
Standard Type:	
Contaminant:	
Concentration (in Mg/Kg):	
Depth (in ft):	
Further Contamination:	*NO*

Environmental FirstSearch
Site Detail Report

TARGET SITE: 3705 E MCDOWELL ROAD
PHOENIX AZ 85008

JOB: 02-0021B

LEAKING UNDERGROUND STORAGE TANKS

SEARCH ID: 12 **DIST/DIR:** 0.04 NE **MAP ID:** 9

NAME: 7-ELEVEN # 21889
ADDRESS: 4002 E MCDOWELL RD
PHOENIX AZ 85008
CONTACT:

REV: 09/14/04
ID1: 0-004654
ID2:
STATUS:
PHONE:

FACILITY ID: *0-004654*
LEAK ID: *3795.01*
CASE PRIORITY: *CLOSED SOIL LEVELS MEET RBCA TIER 1*
DATE INCLUDED: *11/11/1994*
DATE CLOSED: *10/31/1997*
LUST OTHER:

TARGET SITE: 3705 E MCDOWELL ROAD
PHOENIX AZ 85008

JOB: 02-0021B

REGISTERED UNDERGROUND STORAGE TANKS

SEARCH ID: 10 **DIST/DIR:** 0.04 NE **MAP ID:** 9

NAME:	7-ELEVEN # 21889 / SOUTHLAND	**REV:**	01/14/00
ADDRESS:	4002 E MCDOWELL RD	**ID1:**	0-004654
	PHOENIX AZ 85008	**ID2:**	
	MARICOPA	**STATUS:**	
CONTACT:	MR. BOB DENINNO	**PHONE:**	

TANK NUMBER: 1
TANK ACTIVITY STATUS: YES
STATUS: ACTV
DATE INSTALLED: 05/05/1980
DATE REMOVED:
DATE CLOSED: / /
WHAT IS / WAS TANK CONTENT: Gasoline

TANK CHARACTERISTICS:
TANK SIZE IN GALLONS: 8000
TANK MATERIAL: Asphalt-coated or Bare Steel Cathodically Protected Steel (Impressed Current)
TANK RELEASE DETECTION SYSTEM: Sir

PIPE CHARACTERISTICS:
PIPE MATERIAL: Double-Walled
PIPE TYPE FLOW: Pressure

PIPE RELEASE DETECTION SYSTEM:
Automatic Line Leak Detectors Interstitial Monitoring (Double Walled) Line Tightness Testing

OWNER INFORMATION:
OWNER ID NUMBER: 3195
OWNER NAME: 7-ELEVEN INC
OWNER ADDRESS: P O Box 711 Dallas, TX 75221-0711

TANK NUMBER: 2
TANK ACTIVITY STATUS: YES
STATUS: ACTV
DATE INSTALLED: 05/05/1980
DATE REMOVED:
DATE CLOSED: / /
WHAT IS / WAS TANK CONTENT: Gasoline

TANK CHARACTERISTICS:
TANK SIZE IN GALLONS: 12000
TANK MATERIAL: Asphalt-coated or Bare Steel Cathodically Protected Steel (Impressed Current)
TANK RELEASE DETECTION SYSTEM: Sir

PIPE CHARACTERISTICS:
PIPE MATERIAL: Bare Steel Double-Walled
PIPE TYPE FLOW: Pressure

PIPE RELEASE DETECTION SYSTEM:
Automatic Line Leak Detectors Interstitial Monitoring (Double Walled) Line Tightness Testing

- Continued on next page -

TARGET SITE: 3705 E MCDOWELL ROAD
PHOENIX AZ 85008

JOB: 02-0021B

REGISTERED UNDERGROUND STORAGE TANKS

SEARCH ID: 10 **DIST/DIR:** 0.04 NE **MAP ID:** 9

NAME:	7-ELEVEN # 21889 / SOUTHLAND	**REV:**	01/14/00
ADDRESS:	4002 E MCDOWELL RD	**ID1:**	0-004654
	PHOENIX AZ 85008	**ID2:**	
	MARICOPA	**STATUS:**	
CONTACT:	MR. BOB DENINNO	**PHONE:**	

OWNER INFORMATION:
OWNER ID NUMBER: 3195
OWNER NAME: 7-ELEVEN INC
OWNER ADDRESS: P O Box 711 Dallas, TX 75221-0711

TANK NUMBER: 3
TANK ACTIVITY STATUS: YES
STATUS: ACTV
DATE INSTALLED: 05/05/1980
DATE REMOVED:
DATE CLOSED: / /
WHAT IS / WAS TANK CONTENT: Gasoline

TANK CHARACTERISTICS:
TANK SIZE IN GALLONS: 12000
TANK MATERIAL: Asphalt-coated or Bare Steel Cathodically Protected Steel (Impressed Current)
TANK RELEASE DETECTION SYSTEM: Sir

PIPE CHARACTERISTICS:
PIPE MATERIAL: Bare Steel Double-Walled
PIPE TYPE FLOW: Pressure

PIPE RELEASE DETECTION SYSTEM:
Automatic Line Leak Detectors Interstitial Monitoring (Double Walled) Line Tightness Testing

OWNER INFORMATION:
OWNER ID NUMBER: 3195
OWNER NAME: 7-ELEVEN INC
OWNER ADDRESS: P O Box 711 Dallas, TX 75221-0711

Environmental FirstSearch
Site Detail Report

TARGET SITE: 3705 E MCDOWELL ROAD
PHOENIX AZ 85008

JOB: 02-0021B

PERMITS SITE

SEARCH ID: 7 **DIST/DIR:** 0.05 NE **MAP ID:** 7

NAME:	ARROWOOD VILLAGE APARTMENTS	**REV:**	02/02/99
ADDRESS:	4038 E. MCDOWELL RD.	**ID1:**	17258.00
	PHOENIX AZ 85008	**ID2:**	
		STATUS:	
CONTACT:	DIANE BACKHOLM	**PHONE:**	991-008X102

TOTAL NUMBER OF DRY WELLS AT PROPERTY: *3*

THE FOLLOWING IS INFORMATION REGARDING DRY WELL NUMBER: *1*

GENERAL INFORMATION

REGISTRATION KEY: *17258*
OWNER ID:
BUSINESS CODE: *00*
OTHER BUSINESS:

DRY WELL STATUS: *ACTIVE*
OTHER DRY WELL STATUS:
DRY WELL PENETRATE GROUNDWATER (?):

TOWNSHIP/RANGE/SECTION: *2N4E31*
QUARTER SECTION: *SW,SW,SW,SW*
SITE PLAN SENT: *Y*
FEE: *30.00*

COMPLIANCE STATUS REGARDING REGISTRATION

DRY WELL STATUS CHANGE:

REQUESTS BY ADEQ REGARDING REGISTRATRION (X = YES)

INCOMPLETE SUBMITTAL:
APP DETERMINATION:
APP REQUIRED:
FUTURE APP REQUIRED:
MANAGEMENT PRACTICE PLAN:
DRILLERS LOG:

ADDITIONAL FEE NEEDED:
REQUEST DATE:
SECOND REQUEST FOR INFO:
ENTRY DATE: *27-JAN-99*
PROJECT OFFICER: *109*

DRAINAGE AREAS (X = YES)

DRIVEWAY: *X*
ROOFTOP: *X*
STREET: *X*
GENERAL LOADING DOCKS:
HAZARDOUS LOADING DOCKS:
CHEMICAL STORAGE:
LIVESTOCK:
AGRICULTURAL:
OTHER DRAINAGE LOCATION:

- Continued on next page -

TARGET SITE: 3705 E MCDOWELL ROAD
PHOENIX AZ 85008

JOB: 02-0021B

PERMITS SITE

SEARCH ID: 7 **DIST/DIR:** 0.05 NE **MAP ID:** 7

NAME:	ARROWOOD VILLAGE APARTMENTS	**REV:**	02/02/99
ADDRESS:	4038 E. MCDOWELL RD.	**ID1:**	17258.00
	PHOENIX AZ 85008	**ID2:**	
		STATUS:	
CONTACT:	DIANE BACKHOLM	**PHONE:**	991-008X102

OTHER FLUIDS RECEIVED BY WELL:

DRILLER/HAZARDOUS SUBSTANCE INFORMATION (X = YES)
DRY WELL COMPLETE:
DEPTH OF HOLE:
DRILLER CODE:
HAZARDOUS STORAGE:
OTHER DRAINAGE:
OTHER DRAINAGE DESCRIPTION:
DRY WELL INVESTIGATION: *N*

FACILITY CONTACT INFORMATION
CONTACT PERSON: *DIANE BACKHOLM*
CONTACT PERSON TITLE:
CONTACT PERSON ADDRESS: *8700 E. VIA DE VENTURA SUITE 115*
SCOTTSDALE, AZ 85258
CONTACT PERSON PHONE: *991-008X102*

PROPERTY OWNER INFORMATION
PROPERTY OWNER: *NATIONAL VOLUNTARY HEALTH FACILITIES II*
PROPERTY OWNER ADDRESS: *5070 N. 40TH STREET, SUITE 150*
PHOENIX, AZ 85018
PROPERTY OWNER PHONE: *956-4146*

TOTAL NUMBER OF DRY WELLS AT PROPERTY: *3*

THE FOLLOWING IS INFORMATION REGARDING DRY WELL NUMBER: *2*

GENERAL INFORMATION
REGISTRATION KEY: *17258*
OWNER ID:
BUSINESS CODE: *00*
OTHER BUSINESS:

DRY WELL STATUS: *ACTIVE*
OTHER DRY WELL STATUS:
DRY WELL PENETRATE GROUNDWATER (?):

TOWNSHIP/RANGE/SECTION: *2N4E31*
QUARTER SECTION: *SW,SW,SW,SW*
SITE PLAN SENT: *Y*
FEE: *30.00*

COMPLIANCE STATUS REGARDING REGISTRATION
DRY WELL STATUS CHANGE:

- Continued on next page -

TARGET SITE: 3705 E MCDOWELL ROAD
PHOENIX AZ 85008

JOB: 02-0021B

PERMITS SITE

SEARCH ID: 7 **DIST/DIR:** 0.05 NE **MAP ID:** 7

NAME:	ARROWOOD VILLAGE APARTMENTS	**REV:**	02/02/99
ADDRESS:	4038 E. MCDOWELL RD.	**ID1:**	17258.00
	PHOENIX AZ 85008	**ID2:**	
		STATUS:	
CONTACT:	DIANE BACKHOLM	**PHONE:**	991-008X102

REQUESTS BY ADEQ REGARDING REGISTRATRION (X = YES)
INCOMPLETE SUBMITTAL:
APP DETERMINATION:
APP REQUIRED:
FUTURE APP REQUIRED:
MANAGEMENT PRACTICE PLAN:
DRILLERS LOG:

ADDITIONAL FEE NEEDED:
REQUEST DATE:
SECOND REQUEST FOR INFO:
ENTRY DATE: *27-JAN-99*
PROJECT OFFICER: *109*

DRAINAGE AREAS (X = YES)
DRIVEWAY: *X*
ROOFTOP: *X*
STREET: *X*
GENERAL LOADING DOCKS:
HAZARDOUS LOADING DOCKS:
CHEMICAL STORAGE:
LIVESTOCK:
AGRICULTURAL:
OTHER DRAINAGE LOCATION:
OTHER FLUIDS RECEIVED BY WELL:

DRILLER/HAZARDOUS SUBSTANCE INFORMATION (X = YES)
DRY WELL COMPLETE:
DEPTH OF HOLE:
DRILLER CODE:
HAZARDOUS STORAGE:
OTHER DRAINAGE:
OTHER DRAINAGE DESCRIPTION:
DRY WELL INVESTIGATION: *N*

FACILITY CONTACT INFORMATION
CONTACT PERSON: *DIANE BACKHOLM*
CONTACT PERSON TITLE:
CONTACT PERSON ADDRESS: *8700 E. VIA DE VENTURA SUITE 115*
SCOTTSDALE, AZ 85258
CONTACT PERSON PHONE: *991-008X102*

PROPERTY OWNER INFORMATION
PROPERTY OWNER: *NATIONAL VOLUNTARY HEALTH FACILITIES II*
PROPERTY OWNER ADDRESS: *5070 N. 40TH STREET, SUITE 150*

- Continued on next page -

TARGET SITE: 3705 E MCDOWELL ROAD
PHOENIX AZ 85008

JOB: 02-0021B

PERMITS SITE

SEARCH ID: 7 **DIST/DIR:** 0.05 NE **MAP ID:** 7

NAME:	ARROWOOD VILLAGE APARTMENTS	**REV:**	02/02/99
ADDRESS:	4038 E. MCDOWELL RD.	**ID1:**	17258.00
	PHOENIX AZ 85008	**ID2:**	
		STATUS:	
CONTACT:	DIANE BACKHOLM	**PHONE:**	991-008X102

PHOENIX, AZ 85018
PROPERTY OWNER PHONE: *956-4146*

TOTAL NUMBER OF DRY WELLS AT PROPERTY: *3*

THE FOLLOWING IS INFORMATION REGARDING DRY WELL NUMBER: *3*

GENERAL INFORMATION
REGISTRATION KEY: *17258*
OWNER ID:
BUSINESS CODE: *00*
OTHER BUSINESS:

DRY WELL STATUS: *ACTIVE*
OTHER DRY WELL STATUS:
DRY WELL PENETRATE GROUNDWATER (?):

TOWNSHIP/RANGE/SECTION: *2N4E31*
QUARTER SECTION: *SW,SW,SW,SW*
SITE PLAN SENT: *Y*
FEE: *30.00*

COMPLIANCE STATUS REGARDING REGISTRATION
DRY WELL STATUS CHANGE:

REQUESTS BY ADEQ REGARDING REGISTRATRION (X = YES)
INCOMPLETE SUBMITTAL:
APP DETERMINATION:
APP REQUIRED:
FUTURE APP REQUIRED:
MANAGEMENT PRACTICE PLAN:
DRILLERS LOG:

ADDITIONAL FEE NEEDED:
REQUEST DATE:
SECOND REQUEST FOR INFO:
ENTRY DATE: *27-JAN-99*
PROJECT OFFICER: *109*

DRAINAGE AREAS (X = YES)
DRIVEWAY: *X*
ROOFTOP: *X*
STREET: *X*
GENERAL LOADING DOCKS:
HAZARDOUS LOADING DOCKS:
CHEMICAL STORAGE:

- Continued on next page -

Environmental FirstSearch
Site Detail Report

TARGET SITE: 3705 E MCDOWELL ROAD
PHOENIX AZ 85008

JOB: 02-0021B

PERMITS SITE

SEARCH ID: 7 **DIST/DIR:** 0.05 NE **MAP ID:** 7

NAME: ARROWOOD VILLAGE APARTMENTS
ADDRESS: 4038 E. MCDOWELL RD.
PHOENIX AZ 85008
CONTACT: DIANE BACKHOLM

REV: 02/02/99
ID1: 17258.00
ID2:
STATUS:
PHONE: 991-008X102

LIVESTOCK:
AGRICULTURAL:
OTHER DRAINAGE LOCATION:
OTHER FLUIDS RECEIVED BY WELL:

DRILLER/HAZARDOUS SUBSTANCE INFORMATION (X = YES)
DRY WELL COMPLETE:
DEPTH OF HOLE:
DRILLER CODE:
HAZARDOUS STORAGE:
OTHER DRAINAGE:
OTHER DRAINAGE DESCRIPTION:
DRY WELL INVESTIGATION: *N*

FACILITY CONTACT INFORMATION
CONTACT PERSON: *DIANE BACKHOLM*
CONTACT PERSON TITLE:
CONTACT PERSON ADDRESS: *8700 E. VIA DE VENTURA SUITE 115*
SCOTTSDALE, AZ 85258
CONTACT PERSON PHONE: *991-008X102*

PROPERTY OWNER INFORMATION
PROPERTY OWNER: *NATIONAL VOLUNTARY HEALTH FACILITIES II*
PROPERTY OWNER ADDRESS: *5070 N. 40TH STREET, SUITE 150*
PHOENIX, AZ 85018
PROPERTY OWNER PHONE: *956-4146*

Environmental FirstSearch
Site Detail Report

TARGET SITE: 3705 E MCDOWELL ROAD
PHOENIX AZ 85008

JOB: 02-0021B

RCRA GENERATOR SITE

SEARCH ID: 4 **DIST/DIR:** 0.05 NE **MAP ID:** 4

NAME: ALPINE CLEANERS
ADDRESS: 1638 N 40TH ST
PHOENIX AZ 85008

CONTACT: ED MORALES

REV: 6/6/06
ID1: AZD981676927
ID2:
STATUS: SGN
PHONE: 6024053164

SITE INFORMATION

CONTACT INFORMATION: ED MORALES
1638 N 40TH ST
PHOENIX AZ 85008

PHONE: 6024053164

CONTACT INFORMATION: PANCAJ BAKNDA
1638 N 40TH ST
PHOENIX AZ 85008

PHONE: 6022755273

UNIVERSE INFORMATION:

NAIC INFORMATION

81232 - DRYCLEANING AND LAUNDRY SERVICES (EXCEPT COIN-OPERATED)
81232 - DRYCLEANING AND LAUNDRY SERVICES (EXCEPT COIN-OPERATED)

ENFORCEMENT INFORMATION:

VIOLATION INFORMATION:

Environmental FirstSearch
Site Detail Report

TARGET SITE: 3705 E MCDOWELL ROAD
PHOENIX AZ 85008

JOB: 02-0021B

CERCLIS NFRAP

SEARCH ID: 3 **DIST/DIR:** 0.19 NE **MAP ID:** 3

NAME: PRECISION MECHANICAL
ADDRESS: 1610 N. 41ST PLACE
PHOENIX AZ 85008
CONTACT:

REV: 7/25/06
ID1: AZD983471053
ID2: 0904091
STATUS: NFRAP-N
PHONE:

DESCRIPTION:

ACTION/QUALITY	AGENCY/RPS	START/RAA	END
ARCHIVE SITE	EPA In-House		01-11-1993
DISCOVERY	EPA Fund-Financed		08-02-1991
PRELIMINARY ASSESSMENT	State, Fund Financed		01-11-1993
NFRAP (No Futher Remedial Action Planned			

OTHER SITE

SEARCH ID: 9 **DIST/DIR:** 0.19 NE **MAP ID:** 3

NAME: PRECISION MECHANICAL
ADDRESS: 1610 N. 41ST PLACE
PHOENIX AZ 85008
CONTACT:

REV: 12/01/97
ID1: 877
ID2: AZD983471053
STATUS: PA/SI
PHONE:

PROGRAM: *PA/SI*

DISCOVER DATE: *1/1/1900*

SOURCE OF SITE DISCOVERY: *NOT PROVIDED BY AGENCY*

WQARF OR NPL PROJECT AREA (IF APPLICABLE): *EAST WASHINGTON (EW)*

COMMENTS:

TARGET SITE: 3705 E MCDOWELL ROAD
PHOENIX AZ 85008

JOB: 02-0021B

LEAKING UNDERGROUND STORAGE TANKS

SEARCH ID: 16 **DIST/DIR:** 0.24 NE **MAP ID:** 10

NAME: J & S SERVICE CENTER
ADDRESS: 4226 E MCDOWELL RD
PHOENIX AZ 85008
CONTACT:

REV: 05/31/05
ID1: 0-010038
ID2:
STATUS:
PHONE:

FACILITY ID: *0-010038*
LEAK ID: *5459.01*
CASE PRIORITY: *UNDEFINED OR UNKNOWN SOIL CONTAMINATION (DEFAULT FOR NEWLY REPORTED LUSTS)*
DATE INCLUDED: *04/01/2005*
DATE CLOSED:
LUST OTHER:

FACILITY ID: *0-010038*
LEAK ID: *5459.02*
CASE PRIORITY: *UNDEFINED OR UNKNOWN SOIL CONTAMINATION (DEFAULT FOR NEWLY REPORTED LUSTS)*
DATE INCLUDED: *04/01/2005*
DATE CLOSED:
LUST OTHER:

Environmental FirstSearch
Site Detail Report

TARGET SITE: 3705 E MCDOWELL ROAD
PHOENIX AZ 85008

JOB: 02-0021B

LEAKING UNDERGROUND STORAGE TANKS

SEARCH ID: 19 **DIST/DIR:** 0.45 NE **MAP ID:** 16

NAME: UNOCAL # 6062
ADDRESS: 4352 E MCDOWELL RD
PHOENIX AZ 85008
CONTACT:

REV: 09/14/04
ID1: 0-005313
ID2:
STATUS:
PHONE:

FACILITY ID: *0-005313*
LEAK ID: *0914.01*
CASE PRIORITY: *CLOSED SOIL LEVELS MEET RBCA TIER 1*
DATE INCLUDED: *10/12/1989*
DATE CLOSED: *05/08/1996*
LUST OTHER:

Environmental FirstSearch
Site Detail Report

TARGET SITE: 3705 E MCDOWELL ROAD
PHOENIX AZ 85008

JOB: 02-0021B

LEAKING UNDERGROUND STORAGE TANKS

SEARCH ID: 14 **DIST/DIR:** 0.46 NE **MAP ID:** 12

NAME: ARCO # 6009
ADDRESS: 4357 E MCDOWELL RD
PHOENIX AZ 85008
CONTACT:

REV: 04/19/00
ID1: 0-000501
ID2:
STATUS:
PHONE:

FACILITY ID: *0-000501*
LEAK ID: *0939.01*
CASE PRIORITY: *CLOSED SOIL LEVELS MEET RBCA TIER 1*
DATE INCLUDED: *11/15/1989*
DATE CLOSED: *02/17/2000*
LUST OTHER:

FACILITY ID: *0-000501*
LEAK ID: *0939.02*
CASE PRIORITY: *CLOSED SOIL LEVELS MEET RBCA TIER 1*
DATE INCLUDED: *12/16/1992*
DATE CLOSED: *11/23/1999*
LUST OTHER:

FACILITY ID: *0-000501*
LEAK ID: *0939.03*
CASE PRIORITY: *CLOSED SOIL LEVELS MEET RBCA TIER 1*
DATE INCLUDED: *12/16/1992*
DATE CLOSED: *11/23/1999*
LUST OTHER:

FACILITY ID: *0-000501*
LEAK ID: *0939.04*
CASE PRIORITY: *CLOSED SOIL LEVELS MEET RBCA TIER 1*
DATE INCLUDED: *12/16/1992*
DATE CLOSED: *02/17/2000*
LUST OTHER:

TARGET SITE: 3705 E MCDOWELL ROAD
PHOENIX AZ 85008

JOB: 02-0021B

LEAKING UNDERGROUND STORAGE TANKS

SEARCH ID: 18 **DIST/DIR:** 0.48 SE **MAP ID:** 15

NAME: UNOCAL # 5974
ADDRESS: 4002 E VAN BUREN
PHOENIX AZ 85008
CONTACT:

REV: 09/14/04
ID1: 0-006643
ID2:
STATUS:
PHONE:

FACILITY ID: *0-006643*
LEAK ID: *0750.01*
CASE PRIORITY: *CLOSED SOIL LEVELS MEET RBCA TIER 2*
DATE INCLUDED: *02/14/1989*
DATE CLOSED: *03/27/1996*
LUST OTHER:

FACILITY ID: *0-006643*
LEAK ID: *0750.02*
CASE PRIORITY: *CLOSED SOIL LEVELS MEET RBCA TIER 2*
DATE INCLUDED: *02/14/1989*
DATE CLOSED: *03/27/1996*
LUST OTHER:

FACILITY ID: *0-006643*
LEAK ID: *0750.03*
CASE PRIORITY: *CLOSED SOIL LEVELS MEET RBCA TIER 2*
DATE INCLUDED: *02/14/1989*
DATE CLOSED: *03/27/1996*
LUST OTHER:

FACILITY ID: *0-006643*
LEAK ID: *0750.04*
CASE PRIORITY: *CLOSED SOIL LEVELS MEET RBCA TIER 2*
DATE INCLUDED: *02/14/1989*
DATE CLOSED: *03/27/1996*
LUST OTHER:

Environmental FirstSearch
Site Detail Report

TARGET SITE: 3705 E MCDOWELL ROAD
PHOENIX AZ 85008

JOB: 02-0021B

LEAKING UNDERGROUND STORAGE TANKS

SEARCH ID: 13 **DIST/DIR:** 0.49 NW **MAP ID:** 11

NAME: ALL STAR CAR WASH
ADDRESS: 3232 E MCDOWELL RD
PHOENIX AZ 85008
CONTACT:

REV: 09/14/04
ID1: 0-001158
ID2:
STATUS:
PHONE:

FACILITY ID: *0-001158*
LEAK ID: *1257.01*
CASE PRIORITY: *CLOSED SOIL LEVELS MEET RBCA TIER 1*
DATE INCLUDED: *04/26/1990*
DATE CLOSED: *11/04/1994*
LUST OTHER:

TARGET SITE: 3705 E MCDOWELL ROAD
PHOENIX AZ 85008

JOB: 02-0021B

LEAKING UNDERGROUND STORAGE TANKS

SEARCH ID: 17 **DIST/DIR:** 0.50 NE **MAP ID:** 14

NAME: MOBIL 18-KEA
ADDRESS: 4402 E MCDOWELL RD
PHOENIX AZ 85008
CONTACT:

REV: 09/14/04
ID1: 0-003230
ID2:
STATUS:
PHONE:

FACILITY ID: *0-003230*
LEAK ID: *0271.01*
CASE PRIORITY: *KNOWN OR PROBABLE AFFECT ON GW LUST AFFECTING KNOWN OR PROBABLE AFFECT ON GROUNDWATER (GW). LUST AFFECTING GW OR AFFECTING SOILS AT A DEPTH WITHIN 30 FEET OF GW DEPTH*
DATE INCLUDED: *01/19/1987*
DATE CLOSED:
LUST OTHER:

FACILITY ID: *0-003230*
LEAK ID: *0271.02*
CASE PRIORITY: *KNOWN OR PROBABLE AFFECT ON GW LUST AFFECTING KNOWN OR PROBABLE AFFECT ON GROUNDWATER (GW). LUST AFFECTING GW OR AFFECTING SOILS AT A DEPTH WITHIN 30 FEET OF GW DEPTH*
DATE INCLUDED: *01/17/1990*
DATE CLOSED:
LUST OTHER:

FACILITY ID: *0-003230*
LEAK ID: *0271.03*
CASE PRIORITY: *KNOWN OR PROBABLE AFFECT ON GW LUST AFFECTING KNOWN OR PROBABLE AFFECT ON GROUNDWATER (GW). LUST AFFECTING GW OR AFFECTING SOILS AT A DEPTH WITHIN 30 FEET OF GW DEPTH*
DATE INCLUDED: *01/17/1990*
DATE CLOSED:
LUST OTHER:

TARGET SITE: 3705 E MCDOWELL ROAD
PHOENIX AZ 85008

JOB: 02-0021B

LEAKING UNDERGROUND STORAGE TANKS

SEARCH ID: 15 **DIST/DIR:** 0.50 NW **MAP ID:** 13

NAME: CIRCLE K STORE #2701344
ADDRESS: 1002 N 32ND ST
PHOENIX AZ 85008
CONTACT:

REV: 09/14/04
ID1: 0-001396
ID2:
STATUS:
PHONE:

FACILITY ID: *0-001396*
LEAK ID: *3424.01*
CASE PRIORITY: *CLOSED SOIL LEVELS MEET RBCA TIER 1*
DATE INCLUDED: *03/16/1994*
DATE CLOSED: *10/10/1997*
LUST OTHER:

NPL SITE

SEARCH ID: 1 **DIST/DIR:** 0.78 SW **MAP ID:** 1

NAME: GARRETT TURBINE ENGINE CO
ADDRESS: 111 S 34TH ST.
PHOENIX AZ 85034
CONTACT:

REV:
ID1: AZD009000050
ID2:
STATUS: PART OF NPL
PHONE:

EVENT TYPE
DISCOVERY: EPA **DATE:** 08-01-80
PROPOSED: EPA **DATE:**
FINAL LIST: EPA **DATE:**

ACTIVITIES:

CONTAMINANT:

SOURCE:

CONTAMINATED:
THREATENED:

TARGET SITE: 3705 E MCDOWELL ROAD
PHOENIX AZ 85008

JOB: 02-0021B

FED BROWNFIELD

SEARCH ID: 21 **DIST/DIR:** NON GC **MAP ID:**

NAME:	MOTOROLA, INC. (52ND STREET PLANT)	**REV:**	10/18/06
ADDRESS:	5005 E MCDOWELL RD	**ID1:**	AZD009004177-EC
	PHOENIX AZ 85008	**ID2:**	0900517
	MARICOPA	**STATUS:**	EPA ENG CONTROL
CONTACT:		**PHONE:**	

SITE INFORMATION

ENGINEERING CONTROL: DISCHARGE

ACTION NAME: EXPLANATION OF SIGNIFICANT DIFFERENCES
ACTION PLANNED COMPL: 9/30/1999 **ACTION COMPLETED:** 9/10/1999

CONTAMINATED MEDIA: GROUNDWATER

ENGINEERING CONTROL: FLOCCULATION

ACTION NAME: EXPLANATION OF SIGNIFICANT DIFFERENCES
ACTION PLANNED COMPL: 9/30/1999 **ACTION COMPLETED:** 9/10/1999

CONTAMINATED MEDIA: GROUNDWATER

ENGINEERING CONTROL: HYDRAULIC CONTROL

ACTION NAME: EXPLANATION OF SIGNIFICANT DIFFERENCES
ACTION PLANNED COMPL: 9/30/1999 **ACTION COMPLETED:** 9/10/1999

CONTAMINATED MEDIA: GROUNDWATER

ENGINEERING CONTROL: LIQUID PHASE CARBON ADSORPTION

ACTION NAME: EXPLANATION OF SIGNIFICANT DIFFERENCES
ACTION PLANNED COMPL: 9/30/1999 **ACTION COMPLETED:** 9/10/1999

CONTAMINATED MEDIA: GROUNDWATER

ENGINEERING CONTROL: OPERATIONS & MAINTENANCE (O&M)

ACTION NAME: EXPLANATION OF SIGNIFICANT DIFFERENCES
ACTION PLANNED COMPL: 9/30/1999 **ACTION COMPLETED:** 9/10/1999

CONTAMINATED MEDIA: GROUNDWATER

ENGINEERING CONTROL: PUMP AND TREAT

ACTION NAME: EXPLANATION OF SIGNIFICANT DIFFERENCES

- Continued on next page -

TARGET SITE: 3705 E MCDOWELL ROAD
PHOENIX AZ 85008

JOB: 02-0021B

FED BROWNFIELD

SEARCH ID: 21 **DIST/DIR:** NON GC **MAP ID:**

NAME:	MOTOROLA, INC. (52ND STREET PLANT)	**REV:**	10/18/06
ADDRESS:	5005 E MCDOWELL RD	**ID1:**	AZD009004177-EC
	PHOENIX AZ 85008	**ID2:**	0900517
	MARICOPA	**STATUS:**	EPA ENG CONTROL
CONTACT:		**PHONE:**	

ACTION PLANNED COMPL: 9/30/1999 **ACTION COMPLETED:** 9/10/1999

CONTAMINATED MEDIA: GROUNDWATER

ENGINEERING CONTROL: UV OXIDATION

ACTION NAME: EXPLANATION OF SIGNIFICANT DIFFERENCES
ACTION PLANNED COMPL: 9/30/1999 **ACTION COMPLETED:** 9/10/1999

CONTAMINATED MEDIA: GROUNDWATER

ENGINEERING CONTROL: DISCHARGE

ACTION NAME: PRP RA
ACTION PLANNED COMPL: 9/30/2003 **ACTION COMPLETED:** 9/26/2003

CONTAMINATED MEDIA: GROUNDWATER

ENGINEERING CONTROL: EXTRACTION

ACTION NAME: PRP RA
ACTION PLANNED COMPL: 9/30/2003 **ACTION COMPLETED:** 9/26/2003

CONTAMINATED MEDIA: GROUNDWATER

ENGINEERING CONTROL: HYDRAULIC CONTROL

ACTION NAME: PRP RA
ACTION PLANNED COMPL: 9/30/2003 **ACTION COMPLETED:** 9/26/2003

CONTAMINATED MEDIA: GROUNDWATER

ENGINEERING CONTROL: LIQUID PHASE CARBON ADSORPTION

ACTION NAME: PRP RA
ACTION PLANNED COMPL: 9/30/2003 **ACTION COMPLETED:** 9/26/2003

CONTAMINATED MEDIA: GROUNDWATER

- Continued on next page -

TARGET SITE: 3705 E MCDOWELL ROAD
PHOENIX AZ 85008

JOB: 02-0021B

FED BROWNFIELD

SEARCH ID: 21 **DIST/DIR:** NON GC **MAP ID:**

NAME:	MOTOROLA, INC. (52ND STREET PLANT)	**REV:**	10/18/06
ADDRESS:	5005 E MCDOWELL RD	**ID1:**	AZD009004177-EC
	PHOENIX AZ 85008	**ID2:**	0900517
	MARICOPA	**STATUS:**	EPA ENG CONTROL
CONTACT:		**PHONE:**	

ENGINEERING CONTROL: MONITORING

ACTION NAME: PRP RA
ACTION PLANNED COMPL: 9/30/2003 **ACTION COMPLETED:** 9/26/2003

CONTAMINATED MEDIA: GROUNDWATER

ENGINEERING CONTROL: UV OXIDATION

ACTION NAME: PRP RA
ACTION PLANNED COMPL: 9/30/2003 **ACTION COMPLETED:** 9/26/2003

CONTAMINATED MEDIA: GROUNDWATER

ENGINEERING CONTROL: DISCHARGE

ACTION NAME: PRP RD
ACTION PLANNED COMPL: 12/13/1999 **ACTION COMPLETED:** 12/28/1999

CONTAMINATED MEDIA: GROUNDWATER

ENGINEERING CONTROL: FLOCCULATION

ACTION NAME: PRP RD
ACTION PLANNED COMPL: 12/13/1999 **ACTION COMPLETED:** 12/28/1999

CONTAMINATED MEDIA: GROUNDWATER

ENGINEERING CONTROL: HYDRAULIC CONTROL

ACTION NAME: PRP RD
ACTION PLANNED COMPL: 12/13/1999 **ACTION COMPLETED:** 12/28/1999

CONTAMINATED MEDIA: GROUNDWATER

ENGINEERING CONTROL: LIQUID PHASE CARBON ADSORPTION

ACTION NAME: PRP RD
ACTION PLANNED COMPL: 12/13/1999 **ACTION COMPLETED:** 12/28/1999

CONTAMINATED MEDIA: GROUNDWATER

- Continued on next page -

TARGET SITE: 3705 E MCDOWELL ROAD
PHOENIX AZ 85008

JOB: 02-0021B

FED BROWNFIELD

SEARCH ID: 21 **DIST/DIR:** NON GC **MAP ID:**

NAME:	MOTOROLA, INC. (52ND STREET PLANT)	**REV:**	10/18/06
ADDRESS:	5005 E MCDOWELL RD	**ID1:**	AZD009004177-EC
	PHOENIX AZ 85008	**ID2:**	0900517
	MARICOPA	**STATUS:**	EPA ENG CONTROL
CONTACT:		**PHONE:**	

ENGINEERING CONTROL: OPERATIONS & MAINTENANCE (O&M)

ACTION NAME: PRP RD
ACTION PLANNED COMPL: 12/13/1999 **ACTION COMPLETED:** 12/28/1999

CONTAMINATED MEDIA: GROUNDWATER

ENGINEERING CONTROL: PUMP AND TREAT

ACTION NAME: PRP RD
ACTION PLANNED COMPL: 12/13/1999 **ACTION COMPLETED:** 12/28/1999

CONTAMINATED MEDIA: GROUNDWATER

ENGINEERING CONTROL: UV OXIDATION

ACTION NAME: PRP RD
ACTION PLANNED COMPL: 12/13/1999 **ACTION COMPLETED:** 12/28/1999

CONTAMINATED MEDIA: GROUNDWATER

ENGINEERING CONTROL: DISCHARGE

ACTION NAME: RA ON-SITE CONSTRUCT START
ACTION PLANNED COMPL: 6/30/2000 **ACTION COMPLETED:** 3/20/2000

CONTAMINATED MEDIA: GROUNDWATER

ENGINEERING CONTROL: HYDRAULIC CONTROL

ACTION NAME: RA ON-SITE CONSTRUCT START
ACTION PLANNED COMPL: 6/30/2000 **ACTION COMPLETED:** 3/20/2000

CONTAMINATED MEDIA: GROUNDWATER

ENGINEERING CONTROL: LIQUID PHASE CARBON ADSORPTION

ACTION NAME: RA ON-SITE CONSTRUCT START

- Continued on next page -

TARGET SITE: 3705 E MCDOWELL ROAD
PHOENIX AZ 85008

JOB: 02-0021B

FED BROWNFIELD

SEARCH ID: 21 **DIST/DIR:** NON GC **MAP ID:**

NAME:	MOTOROLA, INC. (52ND STREET PLANT)	**REV:**	10/18/06
ADDRESS:	5005 E MCDOWELL RD	**ID1:**	AZD009004177-EC
	PHOENIX AZ 85008	**ID2:**	0900517
	MARICOPA	**STATUS:**	EPA ENG CONTROL
CONTACT:		**PHONE:**	

ACTION PLANNED COMPL: 6/30/2000 **ACTION COMPLETED:** 3/20/2000

CONTAMINATED MEDIA: GROUNDWATER

ENGINEERING CONTROL: PUMP AND TREAT

ACTION NAME: RA ON-SITE CONSTRUCT START
ACTION PLANNED COMPL: 6/30/2000 **ACTION COMPLETED:** 3/20/2000

CONTAMINATED MEDIA: GROUNDWATER

ENGINEERING CONTROL: UV OXIDATION

ACTION NAME: RA ON-SITE CONSTRUCT START
ACTION PLANNED COMPL: 6/30/2000 **ACTION COMPLETED:** 3/20/2000

CONTAMINATED MEDIA: GROUNDWATER

ENGINEERING CONTROL: AIR STRIPPING

ACTION NAME: RECORD OF DECISION
ACTION PLANNED COMPL: 9/30/1988 **ACTION COMPLETED:** 9/30/1988

CONTAMINATED MEDIA: GROUNDWATER

ENGINEERING CONTROL: DISCHARGE

ACTION NAME: RECORD OF DECISION
ACTION PLANNED COMPL: 9/30/1988 **ACTION COMPLETED:** 9/30/1988

CONTAMINATED MEDIA: GROUNDWATER

ENGINEERING CONTROL: CAP

ACTION NAME: RECORD OF DECISION
ACTION PLANNED COMPL: 9/30/1988 **ACTION COMPLETED:** 9/30/1988

CONTAMINATED MEDIA: SOIL

- Continued on next page -

TARGET SITE: 3705 E MCDOWELL ROAD
PHOENIX AZ 85008

JOB: 02-0021B

FED BROWNFIELD

SEARCH ID: 21 **DIST/DIR:** NON GC **MAP ID:**

NAME:	MOTOROLA, INC. (52ND STREET PLANT)	**REV:**	10/18/06
ADDRESS:	5005 E MCDOWELL RD	**ID1:**	AZD009004177-EC
	PHOENIX AZ 85008	**ID2:**	0900517
	MARICOPA	**STATUS:**	EPA ENG CONTROL
CONTACT:		**PHONE:**	

ENGINEERING CONTROL: AIR STRIPPING

ACTION NAME: RECORD OF DECISION
ACTION PLANNED COMPL: 9/30/1994 **ACTION COMPLETED:** 7/21/1994

CONTAMINATED MEDIA: GROUNDWATER

ENGINEERING CONTROL: MONITORING

ACTION NAME: RECORD OF DECISION
ACTION PLANNED COMPL: 9/30/1994 **ACTION COMPLETED:** 7/21/1994

CONTAMINATED MEDIA: GROUNDWATER

ENGINEERING CONTROL: REINJECTION

ACTION NAME: RECORD OF DECISION
ACTION PLANNED COMPL: 9/30/1994 **ACTION COMPLETED:** 7/21/1994

CONTAMINATED MEDIA: GROUNDWATER

ENGINEERING CONTROL: RESIDUALS DISPOSAL

ACTION NAME: RECORD OF DECISION
ACTION PLANNED COMPL: 9/30/1994 **ACTION COMPLETED:** 7/21/1994

CONTAMINATED MEDIA: GROUNDWATER

Environmental FirstSearch Database Descriptions

NPL: ***EPA*** NATIONAL PRIORITY LIST - Database of confirmed and proposed Superfund sites.

NPL Delisted: ***EPA*** NATIONAL PRIORITY LIST Subset - Database of delisted Superfund sites.

CERCLIS: ***EPA*** COMPREHENSIVE ENVIRONMENTAL RESPONSE COMPENSATION AND LIABILITY INFORMATION SYSTEM - Database of current and potential Superfund sites currently or previously under investigation.

NFRAP: ***EPA*** COMPREHENSIVE ENVIRONMENTAL RESPONSE COMPENSATION AND LIABILITY INFORMATION SYSTEM ARCHIVED SITES - database of Archive designated CERCLA sites that, to the best of EPA's knowledge, assessment has been completed and has determined no further steps will be taken to list this site on the National Priorities List (NPL). This decision does not necessarily mean that there is no hazard associated with a given site; it only means that, based upon available information, the location is not judged to be a potential NPL site.

RCRA COR ACT: ***EPA*** RESOURCE CONSERVATION AND RECOVERY INFORMATION SYSTEM SITES - Database of RCRA facilities with reported violations and subject to corrective actions.

RCRA TSD: ***EPA*** RESOURCE CONSERVATION AND RECOVERY INFORMATION SYSTEM TREATMENT, STORAGE, and DISPOSAL FACILITIES. - Database of facilities licensed to store, treat and dispose of hazardous waste materials.

RCRA GEN: ***EPA*** RESOURCE CONSERVATION AND RECOVERY INFORMATION SYSTEM SITES - Database of facilities that generate or transport hazardous waste or meet other RCRA requirements.
LGN - Large Quantity Generators
SGN - Small Quantity Generators
VGN – Conditionally Exempt Generator.
Included are RAATS (RCRA Administrative Action Tracking System) and CMEL (Compliance Monitoring & Enforcement List) facilities.

RCRA NLR: ***EPA*** RESOURCE CONSERVATION AND RECOVERY INFORMATION SYSTEM SITES - Database of facilities not currently classified by the EPA but are still included in the RCRIS database. Reasons for non classification:
Failure to report in a timely matter.
No longer in business.
No longer in business at the listed address.
No longer generating hazardous waste materials in quantities which require reporting.

Federal IC / EC: ***EPA*** BROWNFIELD MANAGEMENT SYSTEM (BMS) - database designed to assist EPA in collecting, tracking, and updating information, as well as reporting on the major activities and accomplishments of the various Brownfield grant Programs.
FEDERAL ENGINEERING AND INSTITUTIONAL CONTROLS- Superfund sites that have either an engineering or an institutional control. The data includes the control and the media contaminated.

ERNS: ***EPA/NRC*** EMERGENCY RESPONSE NOTIFICATION SYSTEM - Database of emergency response actions. Data since January 2001 has been received from the National Response System database as the EPA no longer maintains this data.

Tribal Lands: ***DOI/BIA*** INDIAN LANDS OF THE UNITED STATES - Database of areas with boundaries established by treaty, statute, and (or) executive or court order, recognized by the Federal Government as territory in which American Indian tribes have primary governmental authority. The Indian Lands of the United States map layer shows areas of 640 acres or more, administered by the Bureau of Indian Affairs. Included are Federally-administered lands within a reservation which may or may not be considered part of the reservation.

State/Tribal Sites: ***AZ DEQ*** WQARF REGISTRY LIST & SITE BOUNDARIES- Sites that are currently being addressed by the State's Water Quality Assurance Revolving Fund (WQARF) Program are listed on the WQARF Registry. Sites are represented as polygonal boundary areas as outlined by the Arizona Department of

Environmental Quality. The Program addresses sites that are scored and placed on the Registry, utilizing an approved eligibility and evaluation (E&E) model for evaluating risk and other environmental factors. The information provided includes the E&E score (out of a possible total score of 120), the Site Name, the City and County where the Site is located, and the date the Site was added to the Registry, and other information obtained from the ADEQ Web page. For more information regarding a specific site contact the ADEQ Project Manager or Community Involvement Coordinator identified in the details of the body of this report regarding that specific site titled CONTACTS. Each site may have a different project manager.
Note: In order to quickly identify Registry Sites in the Site Summary List of the First Search Reports. The Registry Sites will be labeled SP instead of State, but reside within the record count totals of the State (State) sites. Site Id's are identified as WQARF_REGISTRY_#/WQARF.
ARIZONA SUPERFUND PROGRAM LIST- (State Database Type in FirstSearch Reports) The Arizona Superfund Program List contains sites and potential sites within the jurisdiction of the Superfund Programs Section (SPS) since April 1997 (the date of the new Water Quality Assurance Revolving Fund statute). Track Info Services removed duplicate listings from this list and has included only the Potential WQARF Registry Sites that have a Program Status of Pending PI. DOD, NPL and current WQARF Registry Sites are not included in the Arizona Superfund Program List as they are listed in NPL and the State registry List. Site ID's are identified as SUPERFUND_TISID#.
Potential WQARF sites that are included in the FirstSearch Reports are those cases which are awaiting or undergoing a WQARF preliminary investigation (PI). Possible outcomes of a PI are:
1) No further investigation or action
2) Registry listing
3) Referral to the ADEQ voluntary remediation program
4) Referral to another ADEQ program.
According to the Arizona Department of Environmental Quality (ADEQ), prior to July 5, 2000 the ADEQ Superfund Programs Section (SPS) published a list of sites entitled Arizona CERCLIS Information Data System (ACIDS). The ACIDS list has been replaced as an active list by the Arizona Superfund Program List. It has been archived and will no longer be distributed or updated.
Information regarding specific sites on the ADEQ Superfund Program List may be obtained by calling the ADEQ Superfund Information Hotline at (602) 207-4360 or toll free in Arizona at 1 800 234-5677, ext. 4360.
Note: ADEQ maintains map boundaries of NPL sites & DOD sites. They may vary from those maintained by the US EPA and respective regions. Information regarding NPL and DOD site boundaries provided by ADEQ utilized in First Search Reports will be included in the State (ST) database category to supplement the US EPA's NPL information in the federal database categories.

State Spills 90: ***AZ DEQ*** HAZARDOUS MATERIALS INCIDENT LOGBOOK-The ADEQ Emergency Response Unit documents chemical spills and incidents, which are referred to the unit.

State/Tribal SWL: ***AZ DEQ*** SOLID WASTE LANDFILLS- The ADEQ Waste Programs Division Recycling and Data Management Unit maintains a list of solid waste facilities (SWATS) identified as active or closed.

State/Tribal LUST: ***AZ DEQ*** LEAKING UNDERGROUND STORAGE TANKS- ADEQ maintains a list of leaking underground tanks (LUST).

State/Tribal UST/AST: ***AZ DEQ/EPA*** UNDERGROUND STORAGE TANKS- Under State (A.R.S. 49-1001 to 1014) and federal RCRA Subtitle laws, persons who own or have owned underground storage tanks (UST's) which contain regulated substances are required to complete a notification form and submit it to the State. More than 6500 facilities have notified the State of more than 19,000 underground tanks.
INDIAN LANDS UST LIST- A listing of underground storage tanks currently on Indian lands under federal jurisdiction. Arizona Indian Lands USTs are administered by US EPA Region 9.

State/Tribal IC: ***AZ DEQ*** ADEQ DEURS AND VEMURS PROGRAM LIST- According to the ADEQ a DEUR (Declaration of Environmental Use Restriction) is a restrictive covenant that must be recorded when the owner of a site with known contamination elects to use either institutional or engineering controls to prevent or minimize exposure to contaminants on the property, or when an owner elects to leave contamination on the property that exceeds the applicable residential soil remediation standard for the property. A previous program, known as VEMUR (Voluntary Environmental Mitigation Use Restriction) has been replaced by the DEUR program but VEMUR record dates and associated data are still provided by the ADEQ for historic purposes.

State/Tribal VCP: ***AZ DEQ*** ARIZONA VOLUNTARY REMEDIATION PROGRAM LIST- The ADEQ Waste Programs Division maintains a list of Voluntary Remediation Program (VRP) sites. A VRP is an eligible

contaminated site on which voluntary investigation and cleanup meaures are taken by property owners, prospective purchasers and other interested parties in cooperation with ADEQ.

State/Tribal Brownfields: ***AZ DEQ/EPA*** ARIZONA BROWNFIELDS PROGRAM LIST- The ADEQ Waste Programs Division maintains a list of Brownfields sites as part of its Voluntary Remediation Program. To be listed by the ADEQ as a Brownfield a site must meet the following three criteria: it must be an underutilized commercial or industrial site, it must possess redevelopment potential, and that redevelopment potential must be complicated by known or perceived contamination with a hazardous substance as defined by CERCLA
Brownfields Management System (BMS) is an analytical database designed to assist EPA in collecting, tracking, and updating information, as well as reporting on the major activities and accomplishments of the various Brownfield grant Programs.

RADON: ***NTIS*** NATIONAL RADON DATABASE - EPA radon data from 1990-1991 national radon project collected for a variety of zip codes across the United States.

State Permits: ***AZ DEQ*** DRY WELLS REGISTRATIONS LIST- The ADEQ Water Quality Division Water Protection Approval and Permits Section maintains a registry of dry wells that have been constructed solely for the disposal of storm water registered under A.R.S. 49-331-336.

State Other: ***AZ DEQ*** ZIP ACIDS LIST- Please Note this is no longer a currently active program maintained by the ADEQ, but the Zip Acids List is included in the First Search database for historical reference.
The state has established a program under A.R.S. 49-282 to remedy sites, which may have an actual or potential impact upon waters of the State, caused by hazardous substances. The Remedial Projects Section of ADEQ maintains this program. Some remedial projects are governed and funded by the federal CERCLA Superfund program and on the National Priority List. Among the sites in Arizona there are three military bases under the U.S. Dept. of Defense jurisdiction.
ADEQ DEURS AND VEMURS PROGRAM LIST- According to the ADEQ a DEUR (Declaration of Environmental Use Restriction) is a restrictive covenant that must be recorded when the owner of a site with known contamination elects to use either institutional or engineering controls to prevent or minimize exposure to contaminants on the property, or when an owner elects to leave contamination on the property that exceeds the applicable residential soil remediation standard for the property. A previous program, known as VEMUR (Voluntary Environmental Mitigation Use Restriction) has been replaced by the DEUR program but VEMUR record dates and associated data are still provided by the ADEQ for historic purposes.

Environmental FirstSearch

1 Mile Radius from Area

ASTM-05: NPL, RCRACOR, STATE

3705 E MCDOWELL ROAD, PHOENIX AZ 85008

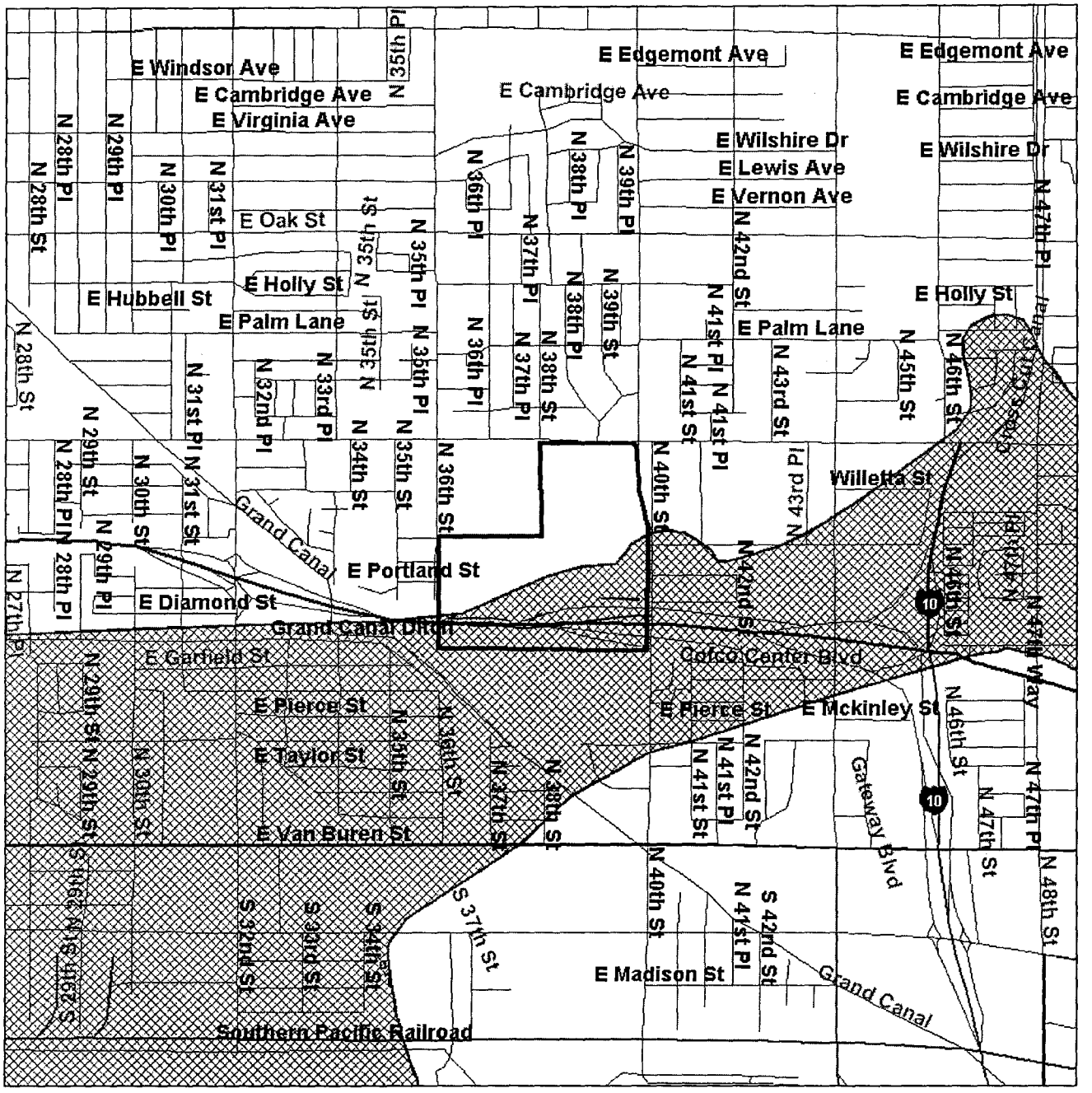

Source: U.S. Census TIGER Files

Area Polygon .....

Identified Site, Multiple Sites, Receptor .....

NPL, DELNPL, Brownfield, Solid Waste Landfill (SWL), Hazardous Wa

Triballand.....

Railroads .....

Environmental FirstSearch
Street Name Report for Streets within .25 Mile(s) of Target Property

TARGET SITE: 3705 E MCDOWELL ROAD
PHOENIX AZ 85008

JOB: 02-0021B

Street Name	Dist/Dir	Street Name	Dist/Dir
E Almeria Rd	0.14 NE	Gateway Commerce Par	0.24 SW
E Beatrice St	0.12 SE	N 34th St	0.24 NW
E Belleview St	0.00 --	N 35th St	0.10 NW
E Coronado Rd	0.05 NE	N 36th St	0.00 --
E Culver St	0.23 NW	N 37th Pl	0.10 NW
E Fillmore St	0.23 SE	N 37th St	0.13 NW
E Garfield St	0.08 SW	N 38th Pl	0.00 --
E Granada Rd	0.22 NE	N 38th St	0.01 NE
E Indian Trl	0.12 SW	N 38th Way	0.24 NE
E McDowell Rd	0.00 --	N 39th Pl	0.24 NE
E McKinley St	0.11 SW	N 39th St	0.11 NE
E Moreland St	0.00 --	N 40th St	0.01 -E
E Oakleaf Dr	0.10 NW	N 41st Pl	0.19 NE
E Palm Ln	0.24 N-	N 41st St	0.11 SE
E Pierce St	0.17 SW	N 42nd St	0.22 SE
E Portland St	0.00 --	N Indian Trl	0.08 SW
E Roosevelt St	0.13 NW	N Oakleaf Dr	0.25 NW
E Willetta St	0.15 NW	NORTH 34th St	0.24 NW
EAST Almeria Rd	0.14 NE	NORTH 35th St	0.10 NW
EAST Beatrice St	0.12 SE	NORTH 36th St	0.00 --
EAST Belleview St	0.00 --	NORTH 37th Pl	0.10 NW
EAST Coronado Rd	0.05 NE	NORTH 37th St	0.13 NW
EAST Culver St	0.23 NW	NORTH 38th Pl	0.00 --
EAST Fillmore St	0.23 SE	NORTH 38th St	0.01 NE
EAST Garfield St	0.08 SW	NORTH 38th Way	0.24 NE
EAST Granada Rd	0.22 NE	NORTH 39th Pl	0.24 NE
EAST Indian Trl	0.12 SW	NORTH 39th St	0.11 NE
EAST McDowell Rd	0.00 --	NORTH 40th St	0.01 -E
EAST McKinley St	0.11 SW	NORTH 41st Pl	0.19 NE
EAST Moreland St	0.00 --	NORTH 41st St	0.11 SE
EAST Oakleaf Dr	0.10 NW	NORTH 42nd St	0.22 SE
EAST Palm Ln	0.24 N-	NORTH Indian Trl	0.08 SW
EAST Pierce St	0.17 SW	NORTH Oakleaf Dr	0.25 NW
EAST Portland St	0.00 --	Papago Fwy	0.00 --
EAST Roosevelt St	0.13 NW	Red Mountain Fwy	0.00 --
EAST Willetta St	0.15 NW		
Fillmore St	0.23 SE		

Environmental FirstSearch

1 Mile Radius from Area

Single Map:

3705 E MCDOWELL ROAD, PHOENIX AZ 85008

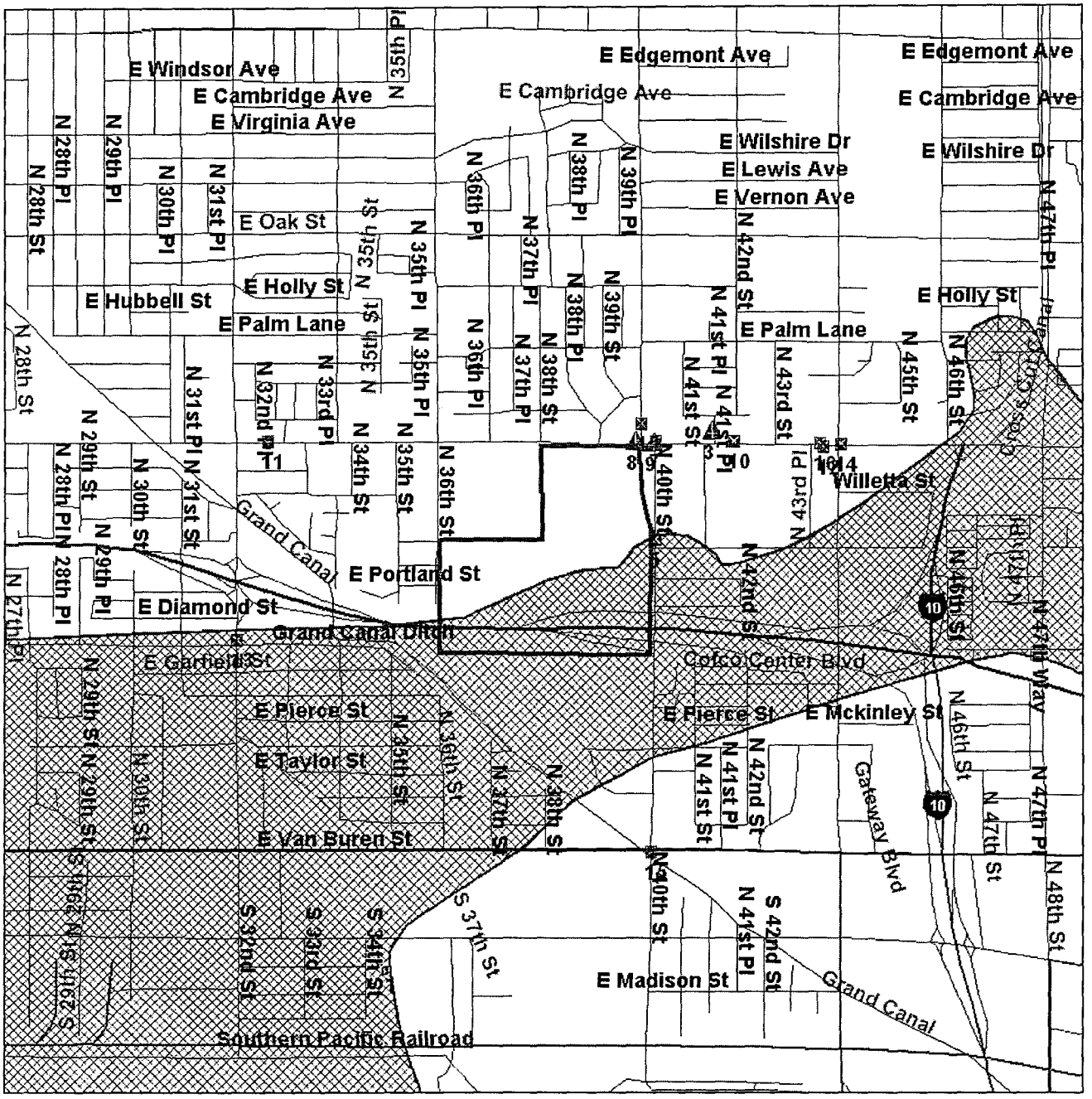

Source: U.S. Census TIGER Files

Area Polygon .....

Identified Site, Multiple Sites, Receptor .....

NPL, DELNPL, Brownfield, Solid Waste Landfill (SWL), Hazardous Wa

Triballand.....

Railroads .....

Environmental FirstSearch

.5 Mile Radius from Area

ASTM-05: Multiple Databases

3705 E MCDOWELL ROAD, PHOENIX AZ 85008

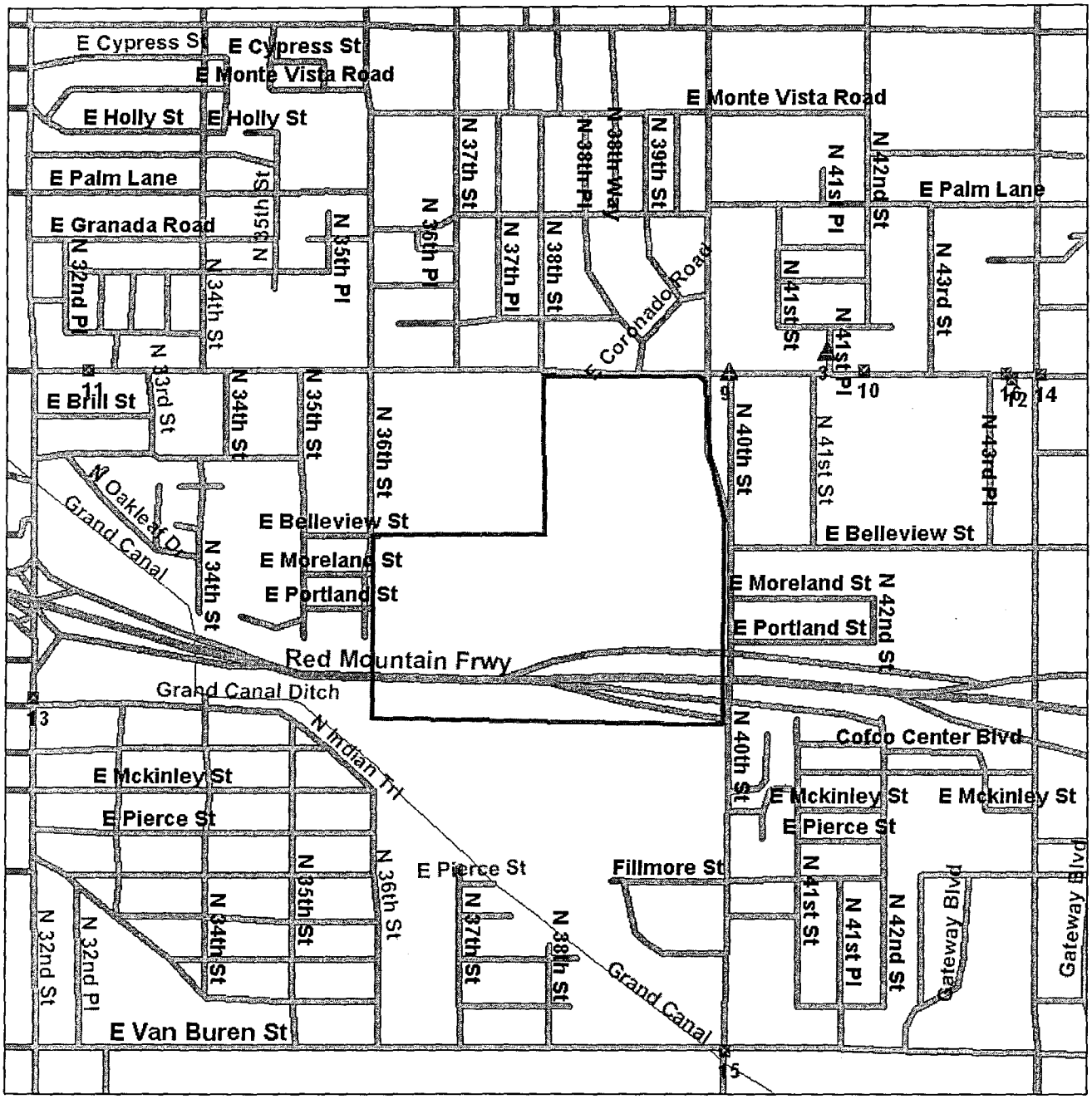

Source: U.S. Census TIGER Files

Area Polygon .....

Identified Site, Multiple Sites, Receptor .....

NPL, DELNPL, Brownfield, Solid Waste Landfill (SWL), Hazardous Wa

Triballand.....

Railroads .....

Environmental FirstSearch

.05 Mile Radius from Area

ASTM-05: Multiple Databases

3705 E MCDOWELL ROAD, PHOENIX AZ 85008

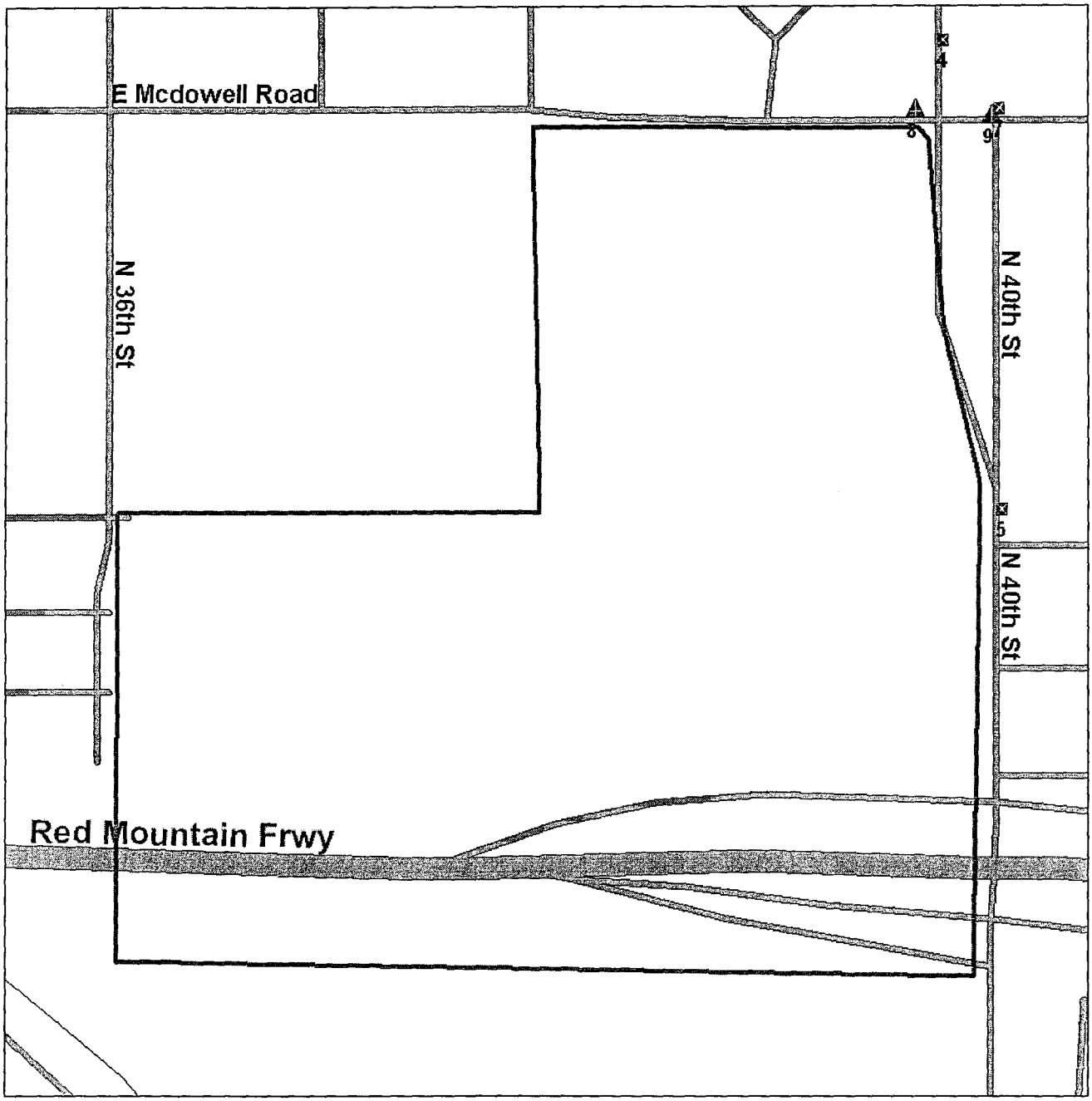

Source: U.S. Census TIGER Files

Area Polygon

Identified Site, Multiple Sites, Receptor

NPL, DELNPL, Brownfield, Solid Waste Landfill (SWL), Hazardous Wa

Triballand

Railroads

APPENDIX E

LIST OF CONTACTS

Contact Name	Agency/Location	Title/Job/Department	Date	Phone Number/ e-mail address	Association With Site/Reason
Sharon Hodges	Allands	Owner	12/29/06	sehodges@allands.com	Historical Title Information
Internet	TrackInfo	First Search	12/27/06	Internet Interface	Database Report
Internet	Maricopa County Assessor's Office	website	1/02/07	http://www.maricopa.gov/Assessor/GIS/map.html	Aerial Photographs, parcel information
Internet	Maricopa County Flood Control District	website	1/02/07	http://www.fcd.maricopa.gov/	Historical Aerial Photographs
Internet	Microsoft Terraserver USA	website	1/02/07	http://www.terraserverusa.com/	Historical Aerial Photograph
Internet	City of Phoenix	Planning Department	12/29/06	http://phoenix.gov/webpmo.html	Zoning Map
Todd Bostwick	City of Phoenix	Archaeologist	1-17-02	602-207-4193	Archaeological Information
Wanda Bulger	AZ State Hospital	Office of Volunteer Services	1-25-02	602-244-1331	Historical Research - State Farm
John Wroble	State Fire Marshal's Office	Fire Dept	1-25-02	602-255-4964	Fire Records
Chuck Hudson	ASLD	Environmental Section Manager	2-6-02	602-542-2657	Historical Research - State Farm
AZ Historical Foundation	Archives	1-24-02	480-965-3283	Historical Research - State Farm	
Damian Low	Arizona Department of Water Resources	Hydrologist	1/11/07	602-771-1500	Monitoring Well Information
Jody Lattimer	Arizona State Land Department	Environmental Department	1/12/07	602-542-4631	Site Information
Walk-In	Arizona State Land Department	Public Records Office	1/19/07	602-542-4631	File Review

GEC © 2007

LIST OF CONTACTS

Contact Name	Agency/Location	Title/Job/Department	Date	Phone Number/ e-mail address	Association With Site/Reason
Walk-In	City of Phoenix	Water Services Department	12/20/06	602-495-5601	Water and Sewer Maps
Walk-In	City of Phoenix	Central Records	on file at GEC	602-262-4936	Historical Aerial Photographs
Ed Packard	V3 Companies of AZ	Project Manager	12/29/06	602-648-4800	Site Information, User Questionnaire
Greg Wolterstorff	V3 Companies of AZ	Project Manager	1/10/07	602-648-4800	Site Information

GEC © 2007

APPENDIX F

Allands
14947 W. Piccadilly Road, Goodyear, AZ 85338 • Phone: 623-535-7800 • Fax: 623-535-7900
www.allands.com • e-mail: sehodges@allands.com
Historical Title and Environmental Research

HISTORICAL TITLE REPORT

YOUR FILE NO:

ALLANDS FILE NO: 2006-12-142T

DATE***: December 20, 2006
***The date of the report reflects the most current data made available by the information sources used at the time the research was performed.

ALLANDS hereby reports a Historical Title Report to the land described below, subject to the items as shown in Schedule B. This is a historical title report ONLY and is neither a guarantee of title, a commitment to insure or a policy of title insurance. The total liability is limited to the fee paid for this report.

1. Title to the estate or interest covered by this report is vested in: THE STATE OF ARIZONA, ACTING BY AND THROUGH ITS COMMISSIONER OF FINANCE

2. By virtue of that certain chain of title attached.

3. The land referred to in this report is located in Maricopa County, Arizona, described as follows:

Assessor's No.: 121-01-001B

SEE LEGAL DESCRIPTION ATTACHED

SCHEDULE B

1. Special Use Permits #603-GF, #26363 & 28984, from 11-29-73, disclosing Verl and Edwina Peterson, as Lessees; terminated 1-1-82.

2. Special Use Permit #83900, dated 1-20-82, disclosing Verl Kent Peterson, as Lessee, terminated 2-14-85.

3. Commercial Lease #03-03507-99, dated 8-17-88, disclosing 40th Street and McDowell Road Joint Venture, as Lessees; assigned 5-17-01 to Red Mountain Ventures, L L C; to terminate 8-16-2087.

4. Special Land Use Permit #023-53550, dated 3-1-94, disclosing Arizona Veterans Service Commission, as Lessee, terminated 11-17-94.

5. Special Land Use Permit #023-100314, dated 2-16-95, disclosing El Zaribah Shrine Temple, as Lessee; expired 9-30-95.

6. Special Land Use Permit #023-101257, dated 10-1-95, disclosing Motorola, as Lessee; expired 10-21-98.

7. Special Land Use Permit #029-104535, dated 12-28-98, disclosing Hargis & Associates, Inc., as Lessee, expired 1-22-99.

8. Special Land Use Permit #029-104560, dated 4-26-99, disclosing Allied Signal, Inc., as Lessee, expired 4-25-2000.

9. No VEMUR'S, DEUR'S; Environmental Liens, or activity and use limitations, if any, were found currently recorded against the property as searched at the subject county recorders office. ***

*** A.R.S. 49-152. This states that the Director of the Arizona Department of Environmental Quality shall allow property owners, who have voluntarily elected to remediate their property for nonresidential uses, to record in the applicable county recorders office a VEMUR limiting, by legal description, the area necessary to protect public health and the environment to nonresidential uses if contamination remains on the property at or above certain levels. In accordance with Arizona Administrative Code (A.A.C.) R18-7-201 et. Seq., a Declaration of Environmental Use Restriction (DEUR) is a voluntary notice to deed which restricts the use of a property to non-residential use. Effective July 18, 2000, the Declaration of Environmental Use Restriction (DEUR) replaced the Voluntary Environmental Mitigation Use Restriction (VEMUR) as a restrictive use covenant.

CHAIN OF TITLE

1. Warranty Deed from J. C. Adams and Anna D. Adams, his wife to the state of Arizona, dated 10-27-17 recorded 11-14-1917 in Book 122 of Deeds, page 548.

2. Patent from the state of Arizona to Brigham Young University, a Utah corporation, dated 8-11-60, recorded 10-10-60 in Docket 3448, page 280.

3. Warranty Deed from Brigham Young University, a Utah corporation and Phoenix Stake of the Church of Jesus Christ of Latter Day Saints, an Arizona corporation, to the state of Arizona, acting by and through its Commissioner of Finance, dated 6-8-72, recorded 6-28-72 in Docket 9529, page 144.

County Parcels

PARCELS
- Parcels

SUBDIVISIONS
- Sub. Boundaries
- Sub Poly

TRANSPORTATION
- Streets (MCDOT)
- Streets (ASSR)

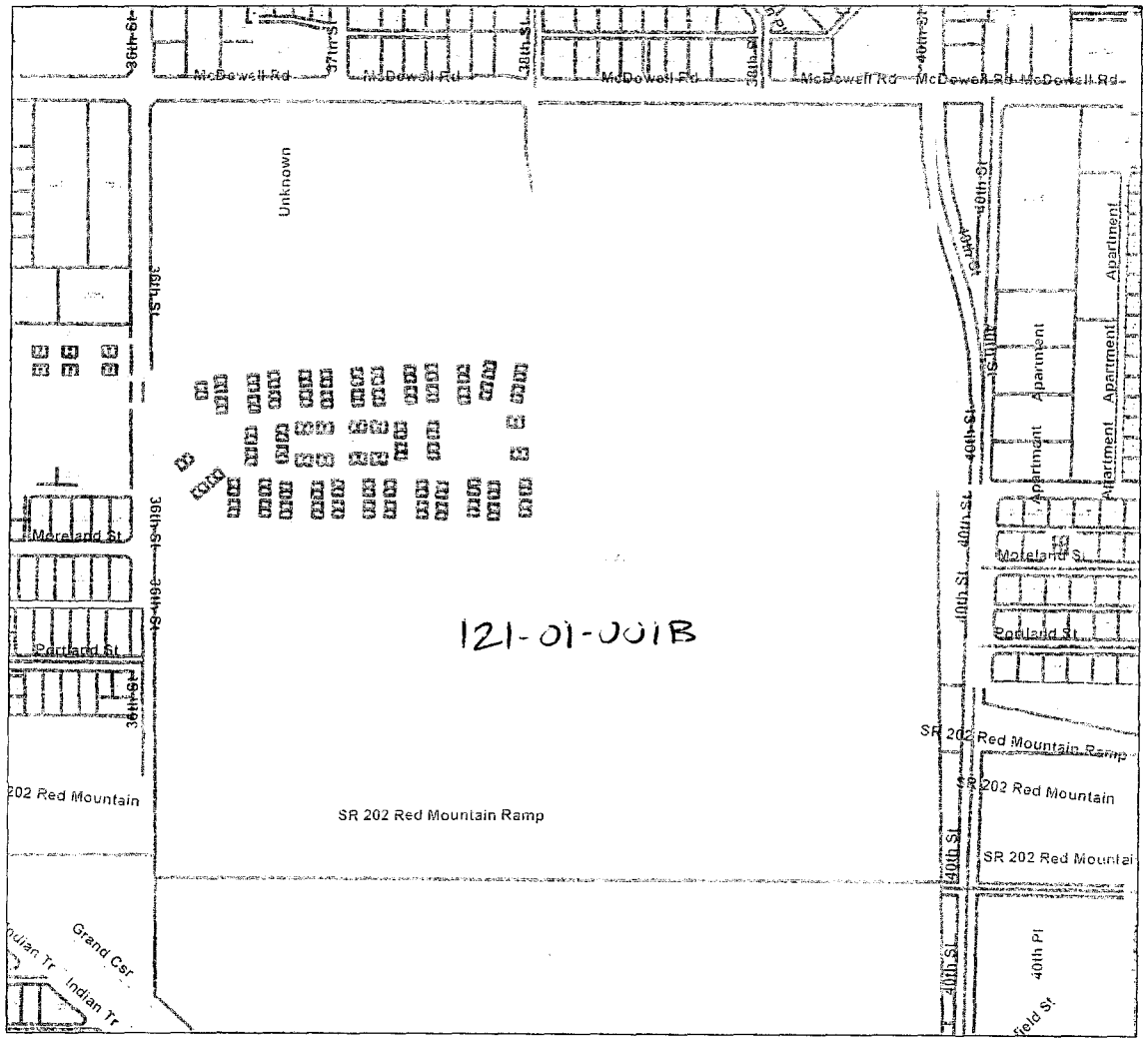

SCALE 1 : 7,642

500 0 500 1,000 1,500

FEET

N

New Search

Property Information

View GIS Maps

Parcel #: 121-01-001-B
Subdivision Name:
MCR #:
Lot #:
Property Address: 3705 E MCDOWELL RD PHOENIX 85008
Property Description: NE4 SEC 1 EX N 40F & EX W 40F RDS & EX PT LY W/IN RD P/D 3574-21 & EX N 1431.24F OF W 1317.40F SD NE4
Section Township Range: 1 1N 3E
Associated Parcel:

Owner Information

View Tax Information

Owner: ARIZONA STATE OF
In Care Of:
Mailing Address: 12950 N 119TH ST SCOTTSDALE AZ 85259 USA
Deed #: 09529-0144
Deed Date: 6/23/1972
Sales Price: n/a
Sales Date: n/a

View Comparables (COMPS)

Tax Year:	2007	2006	2005
Full Cash Value (FCV):	$14,130,500	$17,395,000	$12,894,000
Limited Property Value (LPV):	$14,130,500	$12,900,424	$11,402,232
Notice: The values displayed on this page may not reflect constitutional or statutory adjustments.			
Legal Class:	2	2	2
Assessment Ratio:	16.0%	16.0%	16.0%
Assessed FCV:	$2,260,880	$2,783,200	$2,063,040
Assessed LPV:	$2,260,880	$2,064,068	$1,824,357
Property Use Code:	9500	9500	9500
Tax Area Code:	141300	141300	141300

Additional Component Information (for this parcel)

Valuation Characteristics

New Search

Helpful Information:

Disclaimer
The data contained in this database is deemed reliable but not guaranteed. This information should be used for informational use only and does not constitute a legal document for the description of these properties. Every effort has been made to insure the accuracy of this data; however, this material may be slightly dated which would have an impact on its accuracy. The Maricopa County Assessor's Office disclaims any responsibility or liability for any direct or indirect damages resulting from the use of this data.

©2006 Maricopa County

Maricopa County || 301 W. Jefferson St. || Phoenix, AZ 85003
602-506-3011

BOOK 121
MAP 1

NE¼ SECTION 1 T-1N R-3E

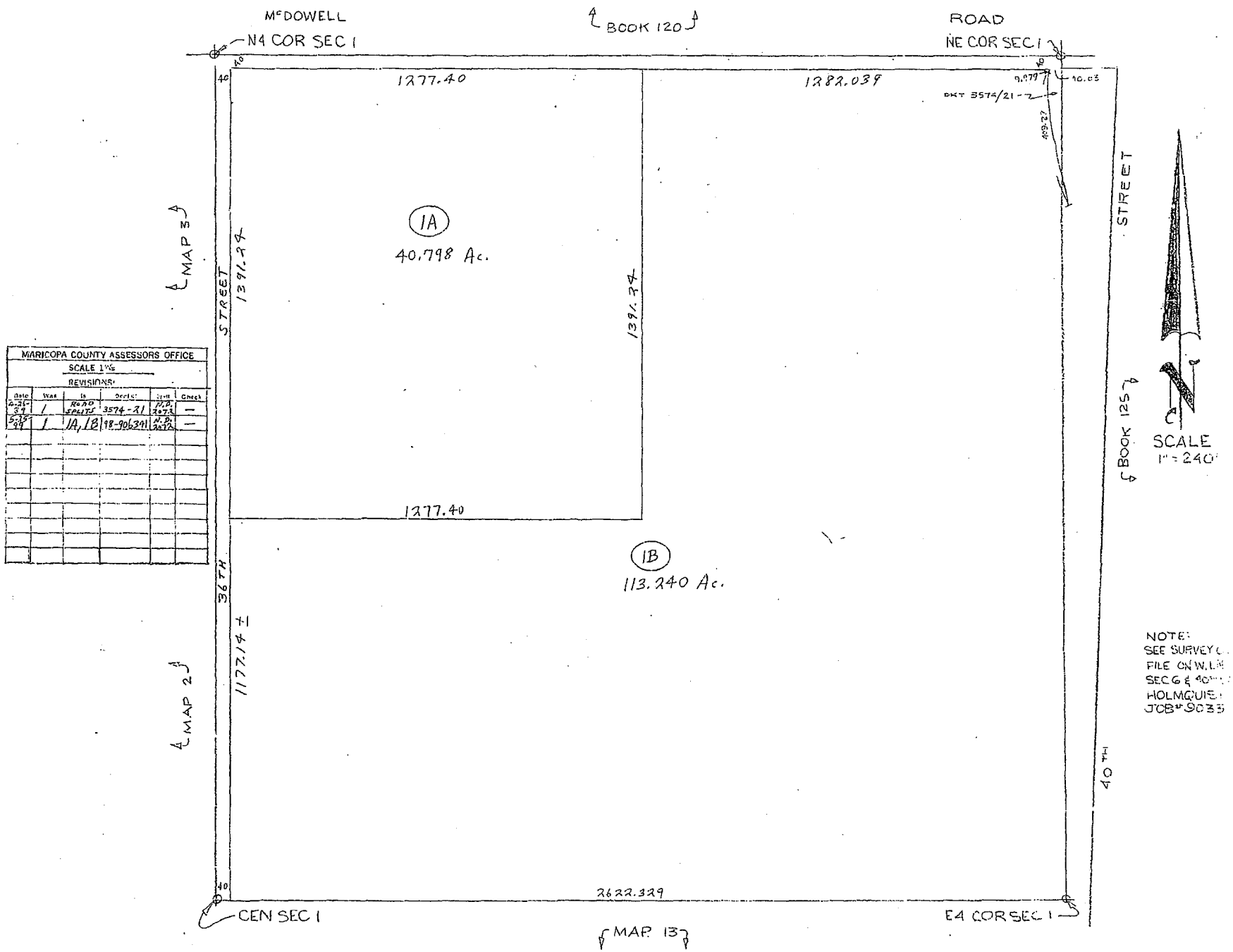

MARICOPA COUNTY ASSESSORS OFFICE					
SCALE 1"=					
REVISIONS:					
Date	Was	Is	Docket	Staff	Check
4-26-99	1	ROAD SPLITS	3574-21	M.D. 2072	—
5-25-99	1	1A, 1B	98-906341	M.D. 2072	—

NOTE:
SEE SURVEY O
FILE ON W.L.
SEC 6 & 40
HOLMQUIS
JOB# 9033

	$92,500
	$74,000
0	$18,500
	$83,853
SS	CONDITION
3	AVERAGE
	$69,500
	$55,600
0	$13,900
	$66,550
SS	CONDITION
3	AVERAGE
	$117,000
	$93,600
0	$23,400
	$108,477
SS	CONDITION
3	AVERAGE
	$97,000
	$77,600
0	$19,400
	$87,544
SS	CONDITION
3	AVERAGE
	$81,000
	$64,800
)	$16,200
	$76,950
SS	CONDITION
3	AVERAGE

120-39-089 3414 W SUNNYSIDE DR PHOENIX AZ 85029-3235 2006-0081786 01/19/2006 $175,000 01/18/2006 WD $130,000
VROOMAN JOHN D & AINSLIE SM/MAE M 2005-1691346 11/08/2005 $150,000 10/2005 WD $104,000
1828 N 25TH PL SINGLE FAMILY RES 01 31 14,810 SF 141300 $26,000
$1,364.62 2005 $112,379
35 02N 03E R-6 (35 02N 03E) S 73' OF N 699.32' OF S 1650' OF W 220' OF E 440' OF W2 SW4 & EX N 30' & EX E 20' .34 AC

LIVING SF	YEAR	STY	ROOM	BATH	PATIO	GARAGE	POOL	HEATING	A/C	EXTERIOR WALL	ROOF	CLASS	CONDITION
1,624	1957	1.0	6	6	BO 2	GR 1	Y	FORCED	REFRIG	FRAME/WOOD	ASPHALT	R3	AVERAGE

120-39-090 1836 N 25TH PL PHOENIX AZ 85008-3519 1987-0266393 04/30/1987 $55,000 02/1987 JT $112,500
KRUM PHILIP J & MARIA LOUISE G ETAL (602)-275-6059 11/15/1976 $28,000 JT $90,000
1835 N 25TH PL SINGLE FAMILY RES 01 31 13,939 SF 141300 $22,500
$1,200.96 2005 $100,128
35 02N 03E R-6 (35 02N 03E) N 70' OF S 143' OF N 699.32' OF S 1650' OF W 220' OF E 440' OF W2 SW4 EX E 20' .32 AC

LIVING SF	YEAR	STY	ROOM	BATH	PATIO	GARAGE	POOL	HEATING	A/C	EXTERIOR WALL	ROOF	CLASS	CONDITION
1,570	1958	1.0	5	6	CP 2	GA 1		FORCED	REFRIG	PAINTED BLOCK	ASPHALT	R3	AVERAGE

120-39-091 11823 S 42ND DR LAVEEN AZ 85339-3279 1994-0467175 06/14/1994 $70,000 04/1994 JT $126,500
MENDIVIL LUZ E MW ETAL $101,200
1920 N 25TH PL SINGLE FAMILY RES 01 31 12,197 SF 141300 $25,300
$1,360.56 2005 $114,043
35 02N 03E R-6 (35 02N 03E) N 60' OF S 392' OF N 699.32' OF S 1650' OF W 220' OF E 440' OF W2 SW4 EX E 20' .28 AC

LIVING SF	YEAR	STY	ROOM	BATH	PATIO	GARAGE	POOL	HEATING	A/C	EXTERIOR WALL	ROOF	CLASS	CONDITION
2,087	1960	1.0	7	6	CP 1	GA 2		FORCED	EVAP	PAINTED BLOCK	BUILT UP	R3	AVERAGE

120-39-092 1918 N 25TH PL PHOENIX AZ 85008-3521 1998-0347496 04/29/1998 $65,000 04/1998 QC $114,000
VASSAR KRISTEN UW (602)-225-0662 1986-0597411 10/30/1986 $73,500 10/30/1986 WD $91,200
1918 N 25TH PL SINGLE FAMILY RES 01 31 12,197 SF 141300 $22,800
$1,242.68 2005 $105,149
35 02N 03E R-6 (35 02N 03E) N 60' OF S 332' OF N 699.32' OF S 1650' OF W 220' OF E 440' OF W2 SW4 EX E 20' .28 AC

LIVING SF	YEAR	STY	ROOM	BATH	PATIO	GARAGE	POOL	HEATING	A/C	EXTERIOR WALL	ROOF	CLASS	CONDITION
1,669	1961	1.0	5	6	BO 2	GA 2		FORCED	REFRIG	PAINTED BLOCK	ASPHALT	R3	AVERAGE

120-39-094A 1910 N 25TH PL PHOENIX AZ 85008-3521 $125,000
ALESSI LUCILLE (602)-275-0649 $100,000
1910 N 25TH PL SINGLE FAMILY RES 01 31 26,789 SF 141300 $25,000
$1,330.70 2005 $110,715
35 02N 03E R-6 (35 02N 03E) N 134F OF S 272F OF N 699.32F OF S 1650F OF W 220 F OF E 440F W2 SW4 EX E 20F

LIVING SF	YEAR	STY	ROOM	BATH	PATIO	GARAGE	POOL	HEATING	A/C	EXTERIOR WALL	ROOF	CLASS	CONDITION
1,502	1944	1.0	5	3	BO 2	GR 1		FORCED	EVAP	PAINTED BLOCK	ROLL	R3	AVERAGE

 Copyright 2006 All Rights Reserved

TAX PARCEL OWNER MAILING ADDRESS DKT-PG REC-DATE SALE PRICE DATE TI VC TOTAL FCV
TITLEHOLDER TELEPHONE NBR PRIOR FEE/DKT PRIOR SALE DATE TI VC IMPR FCV
CONTRACT PURCHASER LCIC DESCRIPTION LC IC PRIM ASSESS PCL SIZE TAX AREA LAND FCV
PROPERTY ADDRESS ASMT% SEC ASSESS PROP TAX YEAR TOTAL LIM
SEC TWN RNG GRID LEGAL DESCRIPTION

121-01-001B 12950 N 119TH ST SCOTTSDALE AZ 85259-2735 $12,894,000
ARIZONA STATE OF
3705 E MCDOWELL RD STATE-VACANT 95 00 113.240 AC 141300 $12,894,000
$11,402,232
01 01N 03E 1 C-R (01 01N 03E) NE4 SEC 1 EX N 40F & EX W 40F RDS & EX PT LY W/IN RD P/D 3574-21 & EX N 1431.24F OF W 1317.40F SD NE4

121-01-003 3645 RUFFIN RD STE 310 SAN DIEGO CA 92123-1887 2004-1090346 09/17/2004 $36,000,000 09/16/2004 SW $18,061,500
INDIGO PALMS LLC 2002-0913431 09/05/2002 $3,472,000 09/2002 WD $14,449,200
3777 E MCDOWELL RD APTS 100+ UNITS 03 76 16.311 AC 141300 $3,612,300
$237,774.80 2005 $17,730,515
01 01N 03E M-H (L 1) INDIGO PALMS LOT I REPLAT MCR 607-44

ADDL IMPROVEMENTS	YEAR	IMPROVE FCV
APT GARAGES/OUTBUILDINGS GOOD	2000	$41,982
APT GARAGES/OUTBUILDINGS GOOD	2000	$40,317
APT GARAGES/OUTBUILDINGS GOOD	2000	$40,317
APT GARAGES/OUTBUILDINGS GOOD	2000	$34,283
APT GARAGES/OUTBUILDINGS GOOD	2000	$34,283
APT GARAGES/OUTBUILDINGS GOOD	2000	$55,149
COMM'L YARD IMPROVEMENT	2000	$717,379
APT GARAGES/OUTBUILDINGS EXC	2003	$182,922

BUILDING INFORMATION	YEAR	HGT	STY	GR-FL-AREA	TL-FL-AREA	GR-PMTR	CONST CD	COND	CMPL	OBSO	MODN	BLDG FCV
APARTMENT (3 OR LESS STORIES)	2000	9	2.0	7,356	14,498	610	D	1%			100%	$1,021,489
APARTMENT (3 OR LESS STORIES)	2000	9	2.0	7,356	14,498	610	D	1%			100%	$1,021,489
APARTMENT (3 OR LESS STORIES)	2000	9	2.0	7,356	14,498	610	D	1%			100%	$1,021,489
APARTMENT (3 OR LESS STORIES)	2000	9	2.0	7,356	14,498	610	D	1%			100%	$1,021,489
APARTMENT (3 OR LESS STORIES)	2000	9	2.0	7,356	14,498	610	D	1%			100%	$1,021,489
APARTMENT (3 OR LESS STORIES)	2000	9	2.0	7,356	14,498	610	D	1%			100%	$1,021,489
APARTMENT (3 OR LESS STORIES)	2000	9	2.0	7,356	14,498	610	D	1%			100%	$1,021,489
APARTMENT (3 OR LESS STORIES)	2000	9	2.0	7,356	14,498	610	D	1%			100%	$1,021,489
APARTMENT (3 OR LESS STORIES)	2000	9	2.0	7,356	14,498	610	D	1%			100%	$1,021,489
APARTMENT (3 OR LESS STORIES)	2000	9	2.0	7,356	14,498	610	D	1%			100%	$1,021,489
APARTMENT (3 OR LESS STORIES)	2000	9	2.0	7,356	14,498	610	D	1%			100%	$1,021,489
APARTMENT (3 OR LESS STORIES)	2000	9	2.0	7,356	14,498	610	D	1%			100%	$1,021,489
APARTMENT (3 OR LESS STORIES)	2000	9	2.0	7,356	14,498	610	D	1%			100%	$1,021,489
APARTMENT (3 OR LESS STORIES)	2000	9	2.0	7,356	14,498	610	D	1%			100%	$1,021,489
APARTMENT (3 OR LESS STORIES)	2000	9	2.0	7,356	14,498	610	D	1%			100%	$1,021,489
APARTMENT (3 OR LESS STORIES)	2000	9	2.0	7,356	14,498	610	D	1%			100%	$1,021,489
CLUBHOUSE	2000	9	1.0	4,213	4,213	354	D	1%			100%	$374,529
APARTMENT (3 OR LESS STORIES)	2003	9	2.0	7,676	15,346	502	D	1%			100%	$981,481
APARTMENT (3 OR LESS STORIES)	2003	9	2.0	7,676	15,346	502	D	1%			100%	$981,481
APARTMENT (3 OR LESS STORIES)	2003	9	2.0	7,676	15,346	502	D	1%			100%	$981,481
APARTMENT (3 OR LESS STORIES)	2003	9	2.0	7,676	15,346	502	D	1%			100%	$981,481
APARTMENT (3 OR LESS STORIES)	2003	9	2.0	7,676	15,346	502	D	1%			100%	$981,481
APARTMENT (3 OR LESS STORIES)	2003	9	2.0	7,676	15,346	502	D	1%			100%	$981,481
APARTMENT (3 OR LESS STORIES)	2003	9	2.0	7,676	15,346	502	D	1%			100%	$981,481
APARTMENT (3 OR LESS STORIES)	2003	9	2.0	7,676	15,346	502	D	1%			100%	$981,481
APARTMENT (3 OR LESS STORIES)	2003	9	2.0	7,676	15,346	502	D	1%			100%	$981,481
APARTMENT (3 OR LESS STORIES)	2003	9	2.0	7,676	15,346	502	D	1%			100%	$981,481
APARTMENT (3 OR LESS STORIES)	2003	9	2.0	7,676	15,346	502	D	1%			100%	$981,481

 Copyright 2006 All Rights Reserved

TAX PARCEL OWNER MAILING ADDRESS DKT-PG REC-DATE SALE PRICE DATE TI VC TOTAL FCV
TITLEHOLDER TELEPHONE NBR PRIOR FEE/DKT PRIOR SALE DATE TI VC IMPR FCV
CONTRACT PURCHASER LCIC DESCRIPTION LC IC PRIM ASSESS PCL SIZE TAX AREA LAND FCV
PROPERTY ADDRESS ASMT% SEC ASSESS PROP TAX YEAR TOTAL LIM
SEC TWN RNG GRID LEGAL DESCRIPTION

121-01-216 2150 N 107TH ST STE 440 SEATTLE WA 98133-9009 2005-1890244 12/14/2005 $47,000,000 12/14/2005 SW $12,638,817
VERDE PROPERTY HOLDINGS LLC /CO $10,242,817
3601 E MCDOWELL RD APTS 100+ UNITS 03 77 9.091 AC 141300 $2,396,000
$159,484.24 2005 $11,627,712
M-H (L 1) MONTEVERDE MCR 660-18

ADDL IMPROVEMENTS	YEAR	IMPROVE FCV
COMM'L YARD IMPROVEMENT	2004	$655,194

BUILDING INFORMATION	YEAR	HGT	STY	GR-FL-AREA	TL-FL-AREA	GR-PMTR	CONST CD	COND	CMPL	OBSO	MODN	BLDG FCV
APARTMENT (3 OR LESS STORIES)	2004	9	3.0	8,618	25,546	612	D	1%			100%	$2,003,612
APARTMENT (3 OR LESS STORIES)	2004	9	3.0	8,618	25,546	612	D	1%			100%	$2,003,612
APARTMENT (3 OR LESS STORIES)	2004	9	3.0	8,618	25,546	612	D	1%			100%	$2,003,612
APARTMENT (3 OR LESS STORIES)	2004	9	3.0	8,618	25,546	612	D	1%			100%	$2,003,612
APARTMENT (3 OR LESS STORIES)	2004	9	3.0	8,618	25,546	612	D	1%			100%	$2,003,612

VC	TOTAL FCV
VC	IMPR FCV
REA	LAND FCV
	TOTAL LIM
	$76,000
	$60,800
0	$15,200
	$71,874
SS	CONDITION
3	AVERAGE
	$69,500
	$55,600
0	$13,900
	$67,216
SS	CONDITION
3	AVERAGE
	$58,000
	$46,400
0	$11,600
	$58,000
SS	CONDITION
3	AVERAGE
	$103,500
	$82,800
	$20,700
	$95,832
SS	CONDITION
3	AVERAGE
	$87,500
	$70,000
	$17,500
	$83,188
SS	CONDITION
	AVERAGE

C	TOTAL FCV
C	IMPR FCV
EA	LAND FCV
	TOTAL LIM
	$112,000
	$89,600
0	$22,400
	$99,160
S	CONDITION
3	AVERAGE
	$92,500
	$74,000
	$18,500
	$85,184
SS	CONDITION

121-01-486 LA
PROPERTY ADDR
LI
121-01-487 SUC
PROPERTY ADDR
LI
121-01-488 WAL
PROPERTY ADDR
LI
121-01-489 SHI
PROPERTY ADDR
LI
MARICOPA, AZ.

Real Esta
TAX PARCEL TIT CON
PROPERTY ADDR SEC
121-01-490 TRO
PROPERTY ADDR
LI
121-01-491 CEN
PROPERTY ADDR
LI
121-01-492 CAL
PROPERTY ADDR
LI
121-01-493 BAH
1225 N 36TH S
LI
MARICOPA, AZ.

Real Esta
TAX PARCEL TI CON
PROPERTY ADDR SEC
121-01-494 AN
PROPERTY ADDR
LI
121-01-495 KA
PROPERTY ADDR

1660099
SL-DEED

WHEN RECORDED MAIL TO: STATE OF ARIZONA,
Attention: Mr. George Leiphart
The Capitol Building
1700 W. Washington, Phoenix, Arizona

DKT 9529 PAGE 144

WARRANTY DEED

For the consideration of Ten Dollars, and other valuable considerations, BRIGHAM YOUNG UNIVERSITY, a Utah corporation, and PHOENIX STAKE OF THE CHURCH OF JESUS CHRIST OF LATTER DAY SAINTS, an Arizona corporation, hereinafter collectively called the "Grantors", acting by and through its Commissioner of Finance hereby convey to the STATE OF ARIZONA, as Grantee, the following real property situated in Maricopa County, Arizona, together with all rights, interests and privileges appurtenant thereto:

PARCEL NO. 1:

THE Northeast quarter of Section 1, Township 1 North, Range 3 East of the Gila and Salt River Base and Meridian.
TRACT "K", ENSIGN TRACT, according to Book 15 of Maps, page 30, records of Maricopa County, Arizona.
THAT part of the North half of the Southwest quarter of the Northwest quarter being part of Lot 5, of Section 6, Township 1 North, Range 4 East of the Gila and Salt River Base and Meridian, lying West of the West right of way line of 40th Street as established August 11, 1960.
THAT part of the South half of the Southwest quarter of the Northwest quarter being part of Lot 5, of Section 6, Township 1 North, Range 4 East of the Gila and Salt River Base and Meridian, lying West of the West right of way line of 40th Street as established August 11, 1960.

PARCEL NO. 2:

THAT part of the Southeast quarter of Section 1, Township 1 North, Range 3 East of the Gila and Salt River Base and Meridian, lying Northeasterly of the right of way of the Grand Canal;
EXCEPT a strip of land 60 feet in width adjoining the North side of the right of way of the Grand Canal, as conveyed by Deed recorded in Book 80 of Deeds, page 406, Maricopa County records. (Appropriators Canal)
THAT part of the North 8-1/3 acres of the West half of the West half of the Southwest quarter, being part of Lot 6 of Section 6, Township 1 North, Range 4 East of the Gila and Salt River Base and Meridian, lying West of the West right of way line of 40th Street as established August 11, 1960.
THAT part of the South 8-1/3 acres of the North 16-2/3 acres of the West half of the West half of the Southwest quarter, being part of Lot 6, of Section 6, Township 1 North, Range 4 East of the Gila and Salt River Base and Meridian, lying West of the West right of way line of 40th Street as established August 11, 1960.
THAT part of the South 8-1/3 acres of the North 25 acres of the West half of the West half of the Southwest quarter, being part of Lot 6 and part of Lot 7 of Section 6, Township 1 North, Range

4 East of the Gila and Salt River Base and Meridian, lying West of the West right of way line of 40th Street as established August 11, 1960.

SUBJECT TO:

1. 1972 taxes not yet due and payable.

2. The liabilities and obligations imposed upon said land by reason of inclusion within the Salt River Project Agricultural Improvement and Power District and Agricultural Improvement Districts.

3. The 1/16th interest heretofore reserved to the State of Arizona in all oil, gas, hydrocarbon substances, coal, stone, metals, minerals, fossils and fertilizer of every name and description and all materials which may be essential to production of fissionable material as set forth in ARS 37.231.

4. Easement for electric distribution system, and rights incident thereto, as set forth in instrument recorded in Book 44 of Miscellaneous, page 262. (PARCEL NO. 1)

5. Easement for roadway, as set forth in Deed to Maricopa County, recorded in Book 125 of Deeds, page 313, over the West 33 feet of the Southwest quarter of Section 6, Township 1 North, Range 4 East. (PARCEL NO. 2)

6. The effect of the recording of map in Book 2 of Road Maps, page 14, purporting to show a right of way for road over the East 33 feet and the North 33 feet of Section 1, Township 1 North, Range 3 East.

7. The effect of the recording of a map in Book 2 of Road Maps, page 15, purporting to show a right of way for road over the West 33 feet of Section 6, Township 1 North, Range 4 East.

8. Roadways as reserved in Patent recorded in Docket 3448, page 280. (PARCEL NO. 1)

9. Roadways as reserved in Patent recorded in Docket 3448, page 283. (PARCEL NO. 2)

10. Easement for roadway, as set forth in Deed to City of Phoenix, recorded in Docket 3574, page 21.

11. Rights of Alice B. Woods, a widow, in and to the South 8-1/3 acres of the North 16-2/3 acres of the west half of the West half of the Southwest quarter of Section 6, Township 1 North, Range 4 East; EXCEPT the North 236.8 feet thereof, as disclosed by various instruments of record, including Certified Copy of Decree of Distribution recorded in Docket 6964, page 690. (PARCEL NO. 2)

12. Rights of R. P. Cooper and Ida N. Cooper, his wife, in and to the South 8-1/3 acres of the North 16-2/3 acres of the West half of the West half of the Southwest quarter of Section 6, Township 1 North, Range 4 East, as set forth

in Mortgage executed by Alice B. Woods, a widow, to R. P. Cooper and Ida N. Cooper, his wife, dated June 6, 1968, recorded June 7, 1968 in Docket 7127, page 166, and Revision Agreement dated July 10, 1971, recorded July 16, 1971, in Docket 8823, page 791. (PARCEL NO. 2)

13. Rights of Elsie C. Bertino, in and to the North 8-1/3 acres of the West half of the West half of the Southwest quarter of Section 6, Township 1 North, Range 4 East; EXCEPT the South 125.23 feet thereof; and to the West 425 feet of the South half of the Southwest quarter of the Northwest quarter of Section 6, Township 1 North, Range 4 East as disclosed by various instruments of record including Certified Copy of Decree of Distribution, recorded in Docket 6964, page 690, and Deed recorded in Docket 2770, page 526. (PARCEL NO. 2)

14. Rights of Felix J. Bertino in and to the North 236.8 feet of the South 8-1/3 acres of the North 16-2/3 acres of the West half of the West half of the Southwest quarter of Section 6, Township 1 North, Range 4 East, and the South 125.23 feet of the North 8-1/3 acres of the West half of the West half of the Southwest quarter of Section 6, Township 1 North, Range 4 East, as disclosed by various instruments of record, including Certified Copy of Decree of Distribution recorded in Docket 6964, page 690. (PARCEL NO. 2)

15. Rights of Mary C. Booth, in and to the North 8-1/3 acres of the West half of the West half of the Southwest quarter of Section 6, Township 1 North, Range 4 East, as disclosed by Certified Copy of Decree of Distribution recorded in Book 230 of Deeds, page 435, and in Book 244 of Deeds, page 432, and in Book 247 of Deeds, page 596. (PARCEL NO. 2)

SUBJECT only to the matters set forth hereinabove, Grantors warrant the title to said real property against all persons whomsoever.

DATED this 8th day of ~~May~~ June, 1972.

BRIGHAM YOUNG UNIVERSITY

By Dallin H. Oaks
President

By Clyde D. Sandgren
Secretary

STATE OF UTAH)
) ss.
COUNTY OF UTAH)

This instrument was acknowledged before me this 8th day of ~~May~~ June, 1972, by Dallin H. Oaks and Clyde D. Sandgren.

Notary Public

My commission expires: June 14, 1974

PHOENIX STAKE OF THE CHURCH OF JESUS
CHRIST OF LATTER DAY SAINTS

By [signature]
President, Phoenix Stake

By [signature]
1st Counselor, Phoenix Stake

By [signature]
2nd Counselor, Phoenix Stake

STATE OF ARIZONA)
) ss.
COUNTY OF MARICOPA)

This instrument was acknowledged before me this 19th day of ~~May~~ June, 1972, by C. Ferrel Dana, Malin W. Lewis, and Harold F. Western President, 1st Counselor and 2nd Counselor respectively of the Phoenix Stake of the Church of Jesus Christ of Latter-Day Saints.

[signature]
Notary Public

My commission expires:

My Commission Expires April 26, 1974

APPROVED AS TO FORM

This 24 day of May, 1972

[illegible]
The Attorney General

By: Fred W. Stark
Assistant Attorney General

APPROVED AS TO FORM LAW DEPT.

[illegible] that the with-
[illegible] and re-
[illegible] of
TRANSAMERICA TITLE INSURANCE COMPANY

JUN 28 '72 -4 00
9529
144 - 147

[signature]

1 W

APPENDIX G

Environmental ◆ Geotechnical ◆ Chemical ◆ Materials Testing

2801 South 35th Street, Phoenix, AZ 85034
ph 602.393.4800 ◆ ◆ info@gecsab.com ◆ ◆ 602.393.4801 fax

December 29, 2006

Client: V3 Companies of Arizona
Attn: Edward Packard

Site: Vacant Land
SWC 40th St and McDowell Rd
Phoenix, Arizona

USER QUESTIONNAIRE FOR PHASE I ENVIRONMENTAL SITE ASSESSMENTS

The new All Appropriate Inquiry (AAI, 40 CFR 312) requirements and guidance on conducting Phase I Environmental Site Assessments (ESAs) have requirements for the "User" of the assessment. The User is responsible for providing information on the following issues in an attempt to qualify for landowner liability protections (LLPs). This information should be provided to the Environmental Professional for incorporation into the Phase I ESA report. Please check yes or no, or if you do not want to provide this information to us, please state this fact on the lines provided. In addition, please provide any additional information you may have regarding the Site.

(1) **Environmental cleanup liens that are filed or recorded against the Site (40 CFR 132.25).** Are you aware of any environmental cleanup liens against the Site that are filed or recorded under federal, tribal, state, or local law? ☐YES ☒NO
If yes, please explain:

---

(2) **Activity and land use limitations that are in place on the Site or that have been filed or recorded in a registry (40 CFR 312.26).** Are you aware of any activity use limitations (AULs), such as engineering controls, land use restrictions, or institutional controls that are in place at the Site and/or have been filed in a registry under federal, tribal, state, or local law? ☐YES ☒NO
If yes, please explain:

---

(3) **Specialized knowledge or experience of the person requesting the Phase I ESA and seeking to qualify for the landowner liability protections (40 CFR 312.28).** As the user of this ESA, do you have any specialized knowledge or experience related to the Site or adjoining properties? For example, are you involved in the same line of business as the current or former occupants of the Site or an adjoining property so that you would have specialized knowledge of the chemicals and processes used by this type of business? ☐YES ☒NO
If yes, please explain:

---

(4) Relationship of the purchase price to the fair market value of the property, if it were not contaminated (40 CFR 312.29). Does the purchase price offered for this property reasonably reflect the fair market value of the Site? ☐YES ☐NO
If there is a difference between the purchase price and the fair market value, have you considered whether the lower purchase price is because contamination is known or believed to be at the Site?
Please discuss:
Property will be sold at auction

(5) Commonly known or reasonably ascertainable information about the Site (40 CFR 312.30). Are you aware of commonly known or reasonably ascertainable information about the Site that would help the environmental professional to identify conditions indicative of releases or threatened releases? For example, as user,

(a) Do you know the past uses of the Site? ☐YES ☒NO
(b) Do you know of specific chemicals that are present or once were present at the Site? ☐YES ☒NO
(c) Do you know of spills or other chemical releases that have taken place at the Site? ☐YES ☒NO
(d) Do you know of any environmental cleanups that have taken place or are ongoing at the Site? ☐YES ☒NO

If yes, please explain:

(6) The degree of obviousness of the presence or likely presence of contamination at the Site and the ability to detect the contamination by appropriate investigation (40 CFR 312.31). As the user of this ESA, based on your knowledge and experience related to the Site, are there any obvious indicators that point to the presence or likely presence of contamination at the Site? ☐YES ☒NO
If yes, please explain:

Completed on behalf of: V3

By – Signature: [signature]

Print Name: Edward Packard