A.L.T.A./N.S.P.S. LAND TITLE SURVEY

OF

A PORTION OF THE OF SECTION 36, TOWNSHIP 1 SOUTH, RANGE 2 EAST OF THE GILA AND SALT RIVER MERIDIAN, MARICOPA COUNTY, ARIZONA

TITLE REFERENCE

THIS SURVEY IS BASED UPON THE TITLE COMMITMENT PREPARED BY FIDELITY NATIONAL TITLE INSURANCE COMPANY TITLE NO. AZ-FMPC-IMP-N/A-1-20-10005654, DATED AUGUST 24, 2020.

HILGARTWILSON, LLC HAS RELIED SOLELY UPON THE INFORMATION CONTAINED WITHIN THE TITLE COMMITMENT AND SCHEDULE B DOCUMENTS PROVIDED BY FIDELITY NATIONAL TITLE INSURANCE COMPANY AS LISTED HEREON. HILGARTWILSON, LLC AND JOHN W. MARSHALL (RLS) MAKE NO STATEMENT AS TO THE ACCURACY OR COMPLETENESS OF THE SUBJECT REPORT.

NOT ACCEPTABLE
SEE ATTACHED JPN 9/18/2020
53-121529

LEGAL DESCRIPTION

PARCELS 1 THROUGH 5, INCLUSIVE, OF AMENDED STATE PLAT NO. 30 SOUTH MOUNTAIN 620, ACCORDING TO PLAT RECORDED IN BOOK 1002 OF MAPS, PAGE 50, RECORDS OF MARICOPA COUNTY, ARIZONA.

SCHEDULE "B" - EXCEPTIONS (#)

1. PROPERTY TAXES, WHICH ARE A LIEN NOT YET DUE AND PAYABLE, INCLUDING ANY ASSESSMENTS COLLECTED WITH TAXES TO BE LEVIED FOR THE YEAR 2020
2. ANY ACTION THAT MAY BE TAKEN BY THE ARIZONA DEPARTMENT OF TRANSPORTATION TO ACQUIRE RIGHT OF WAY AND ACCESS FOR STATE HIGHWAY, AS DISCLOSED BY RESOLUTION OF ESTABLISHMENT
RECORDING DATE: SEPTEMBER 16, 1987
RECORDING NO: 87-578089
(SHOWN)
3. EASEMENTS, COVENANTS, CONDITIONS AND RESTRICTIONS AS SET FORTH ON THE PLAT RECORDED IN BOOK 374 MAPS, PAGE 21
(NOT SHOWN – SUPERCEDED BY BOOK 1002, PAGE 50, M.C.R.)
4. MATTERS CONTAINED IN THAT CERTAIN DOCUMENT
ENTITLED: CONSENT TO USE OF EASEMENT
RECORDING DATE: JULY 29, 1997
RECORDING NO: 97-0510734
REFERENCE IS HEREBY MADE TO SAID DOCUMENT FOR FULL PARTICULARS.
(SHOWN)
5. RIGHT-OF-WAY FOR PUBLIC ROADWAYS AND UNDERGROUND UTILITIES, DATED MARCH 10, 2000 BY AND BETWEEN THE STATE OF ARIZONA AND CITY OF PHOENIX
RECORDING DATE: APRIL 19, 2000
RECORDING NO: 00-0295194A
(SHOWN)
6. MATTERS CONTAINED IN THAT CERTAIN DOCUMENT
ENTITLED: DEVELOPMENT AGREEMENT FOR SOUTH MOUNTAIN 620
RECORDING DATE: JULY 26, 2001
RECORDING NO: 2001-0674412 AND
AMENDED AND RESTATED DEVELOPMENT AGREEMENT
RECORDING DATE: FEBRUARY 13, 2009
RECORDING NO: 2009-0123737
REFERENCE IS HEREBY MADE TO SAID DOCUMENT FOR FULL PARTICULARS.
(NOT SHOWN – AGREEMENT – NOTHING PLOTTABLE)
7. EASEMENT(S) FOR THE PURPOSE(S) SHOWN BELOW AND RIGHTS INCIDENTAL THERETO AS SET FORTH IN A DOCUMENT:
PURPOSE: PUBLIC UTILITIES POWER
RECORDING DATE: MARCH 04, 2002
RECORDING NO: 2002-0225551
(SHOWN)
8. ORDINANCE NO. S-30328 IN FAVOR OF THE CITY OF PHOENIX, ARIZONA
RECORDING DATE: SEPTEMBER 11, 2003
RECORDING NO: 2003-1275882
(SHOWN)
9. EASEMENTS, COVENANTS, CONDITIONS AND RESTRICTIONS AS SET FORTH ON THE PLAT RECORDED IN BOOK 1002 OF MAPS, PAGE 50.
(SHOWN)
10. ORDINANCE G-5299 IN FAVOR OF THE CITY OF PHOENIX, ARIZONA
FOR: ZONING
RECORDING DATE: JANUARY 14, 2009
RECORDING NO: 2009-0029895
(NOT SHOWN – NOTHING PLOTTABLE)
11. MATTERS CONTAINED IN THAT CERTAIN DOCUMENT
ENTITLED: STATE LAND DEPARTMENT STATE OF ARIZONA RIGHT-OF-WAY NO. 16-118198
RECORDING DATE: JULY 06, 2016
RECORDING NO: 2016-0471896 AND
AMENDMENT RECORDED MARCH 13, 2018 IN RECORDING NO. 2018-0189380
REFERENCE IS HEREBY MADE TO SAID DOCUMENT FOR FULL PARTICULARS.
(SHOWN)
12. MATTERS CONTAINED IN THAT CERTAIN DOCUMENT
ENTITLED: AGREEMENT FOR RELOCATION OF SRP DISTRIBUTION FACILITIES
RECORDING DATE: AUGUST 10, 2017
RECORDING NO: 2017-0587840
REFERENCE IS HEREBY MADE TO SAID DOCUMENT FOR FULL PARTICULARS.
(SHOWN)
13. EASEMENT(S) FOR THE PURPOSE(S) SHOWN BELOW AND RIGHTS INCIDENTAL THERETO AS SET FORTH IN A DOCUMENT:
PURPOSE: POWER DISTRIBUTION
RECORDING DATE: DECEMBER 04, 2017
RECORDING NO: 2017-0897206 AND
RE-RECORDING DATE: FEBRUARY 20, 2019
RE-RECORDING NO: 2019-0116264
(NOT SHOWN – EAST OF SITE)
14. EASEMENT(S) FOR THE PURPOSE(S) SHOWN BELOW AND RIGHTS INCIDENTAL THERETO AS SET FORTH IN A DOCUMENT:
PURPOSE: OVERHEAD AND UNDERGROUND POWER DISTRIBUTION
RECORDING DATE: FEBRUARY 25, 2019
RECORDING NO: 2019-0127585 AND
RE-RECORDING DATE: JULY 12, 2019
RE-RECORDING NO: 2019-0526878
(NOT SHOWN – EAST OF SITE)

SCHEDULE "B" - EXCEPTIONS (#)

15. 50 YEAR RIGHT OF WAY NO. 14-70582 DATED 9-20-1979 TO SALT RIVER PROJECT AGRICULTURAL IMPROVEMENT AND POWER DISTRICT, AS TO 34.2% INTEREST; ARIZONA PUBLIC SERVICE COMPANY, AN ARIZONA CORPORATION, AS TO 34.6% INTEREST; EL PASO ELECTRIC COMPANY, A TEXAS CORPORATION, AS TO 18.7% INTEREST AND PUBLIC SERVICE COMPANY OF NEW MEXICO, A NEW MEXICO CORPORATION, AS TO 12.1% INTEREST FOR A LINE OF POLES.
(SHOWN)
16. 50 YEAR RIGHT OF WAY NO. 14-52814 DATED 7-8-1994 TO SALT RIVER PROJECT AGRICULTURAL IMPROVEMENT AND POWER DISTRICT FOR AN OVERHEAD 69KV ELECTRIC SUB TRANSMISSION LINE;
RIGHT-OF-WAY RECORDED IN:
RECORDING DATE: SEPTEMBER 19, 1994
RECORDING NO: 94-0686465
(SHOWN)
17. RIGHT OF WAY NO. 16-102696 DATED 1-8-1998 TO THE CITY OF PHOENIX FOR AN UNDERGROUND SEWER LINE.
(SHOWN)
18. RIGHT OF WAY NO. 16-103778 DATED 3-10-2000 TO THE CITY OF PHOENIX FOR PUBLIC ROADWAYS AND UNDERGROUND UTILITIES.
(SHOWN)
19. PERPETUAL RIGHT OF WAY NO. 16-118553 DATED 2-12-2016 TO THE ARIZONA DEPARTMENT OF TRANSPORTATION FOR A PUBLIC ROADWAY.
(SHOWN)
20. RIGHT OF WAY NO. 18-119736 TO SOUTHWEST GAS CORPORATION FOR AN UNDERGROUND 4" NATURAL GAS PIPELINE; TO EXPIRE 11-1-2027.
(SHOWN)
21. TEMPORARY RIGHT OF ENTRY NO. 30-120350 DATED 1-14-2019 TO THE CITY OF PHOENIX FOR SEWER LINE.
(SHOWN)
22. PERPETUAL RIGHT OF WAY NO. 16-120345 DATED 5-21-2019 TO THE CITY OF PHOENIX FOR UNDERGROUND 15" SEWER DISTRIBUTION LINE;
RIGHT-OF-WAY RECORDED IN:
RECORDING DATE: DECEMBER 13, 2019
RECORDING NO: 2019-1011791
(SHOWN)
23. RIGHT OF WAY NO. 18-120813 DATED 7-16-2019 TO GILA LOCAL EXCHANGE CARRIER, INC., DBA ALLUVION COMMUNICATIONS FOR AN UNDERGROUND 288-COUNT FIBER OPTIC COMMUNICATION LINE; TO EXPIRE 7-15-2029.
(NOT SHOWN – INDETERMINATE LOCATION – LYING WITHIN THE VICINITY OF LOOP 202)
24. APPLICATION FOR PURCHASE NO. 53-121529 DATED 6-4-2020 FOR RESIDENTIAL DEVELOPMENT.
(NOT SHOWN – NOTHING PLOTTABLE)

BASIS OF BEARING

BASIS OF BEARING IS S89°46'05"W ALONG THE SOUTH LINE OF THE SOUTHEAST QUARTER OF SECTION 36, TOWNSHIP 1 SOUTH, RANGE 2 EAST OF THE GILA AND SALT RIVER MERIDIAN, MARICOPA COUNTY, ARIZONA, BETWEEN THE MONUMENTS AS SHOWN HEREON.

FLOOD ZONE DESIGNATION

THE SUBJECT PROPERTY LIES WITHIN SHADED ZONE "X" WITH A DEFINITION OF: 0.2-PERCENT-ANNUAL-CHANCE FLOODPLAIN, AREAS OF 1-PERCENT-ANNUAL-CHANCE (BASE FLOOD) SHEET FLOW FLOODING WITH AVERAGE DEPTHS OF LESS THAN 1 FOOT, AREAS OF BASE FLOOD STREAM FLOODING WITH A CONTRIBUTING DRAINAGE AREA OF LESS THAN 1 SQUARE MILE, OR AREAS PROTECTED FROM THE BASE FLOOD BY LEVEES. NO BFES OR DEPTHS ARE SHOWN IN THIS ZONE, AND INSURANCE PURCHASE IS NOT REQUIRED. DESIGNATION DETERMINED BY FEMA FLOOD ZONE MAP 04013C2690L, PANEL NUMBER 2690 OF 4425, EFFECTIVE DATE OCTOBER 16, 2013.

PROJECT ACCEPTABLE
JPN 9/18/2020

REFERENCE DOCUMENTS

1. FINAL PLAT OF "FOOTHILLS CLUB WEST PARCEL 17" PER BOOK 447, PAGE 15, M.C.R.
2. FINAL PLAT FOR PARCEL 16C-III AT FOOTHILLS CLUB WEST PER BOOK 459, PAGE 17, M.C.R.
3. FINAL PLAT FOR "PARCEL 23 AT FOOTHILLS CLUB WEST" PER BOOK 469, PAGE 39, M.C.R.
4. FINAL PLAT OF "FOOTHILLS RESERVE PARCEL A-2" PER BOOK 549, PAGE 49, M.C.R.
5. FINAL PLAT FOR "FOOTHILLS RESERVE PARCEL D" PER BOOK 569, PAGE 39, M.C.R.
6. RECORD OF SURVEY PLSS SUBDIVISION (GDACS) PER BOOK 661, PAGE 26, M.C.R.
7. AMENDED STATE PLAT NO. 30 SOUTH MOUNTAIN 620 PER BOOK 1002, PAGE 50, M.C.R.
8. FINAL PLAT OF FOOTHILLS CLUB WEST PARCEL 24 PER BOOK 1188, PAGE 14, M.C.R.

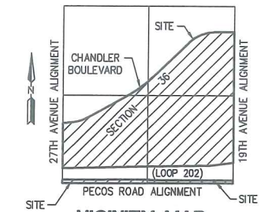

VICINITY MAP
NOT TO SCALE

OWNER/CLIENT

ARIZONA STATE LAND DEPARTMENT
1616 W. ADAMS STREET
PHOENIX, ARIZONA 85007
CONTACT: MR. VAN ROBINSON

SURVEYOR

HILGARTWILSON, LLC
2141 E. HIGHLAND AVE., STE. 250
PHOENIX, ARIZONA 85016
PHONE: (602) 490-0535
CONTACT: JOHN W. MARSHALL, RLS

ACREAGE ACCEPTABLE FOR AUCTION JPN 9/18/20
326.08 + 47.40 = 373.48
326.078 + 47.40 = 373.478 ac.

NOTES

1. AREA IS 14,203,967 SQ. FT. OR 326.0782 ACRES MORE OR LESS.
2. THIS SURVEY REFLECTS ABOVE GROUND INDICATIONS OF UTILITIES. THE SURVEYOR MAKES NO GUARANTEE THAT ALL OF THE UNDERGROUND UTILITIES SHOWN COMPRISE ALL IN THE AREA, EITHER IN SERVICE OR ABANDONED. THE SURVEYOR FURTHER DOES NOT WARRANT THAT THE UNDERGROUND UTILITIES SHOWN ARE IN THE LOCATION INDICATED, ALTHOUGH HE DOES CERTIFY THAT THEY ARE LOCATED AS ACCURATELY AS POSSIBLE FROM THE INFORMATION PROVIDED. THE SURVEYOR HAS NOT PHYSICALLY LOCATED UNDERGROUND UTILITIES. (TABLE A, ITEM #11 & 21 IN REFERENCE TO VISIBLE SURFACE UTILITIES)
3. DECLARATION IS MADE TO THE ORIGINAL PURCHASER OF SURVEY AND ALL PARTIES LISTED IN THE SURVEYORS CERTIFICATION. IT IS NOT TRANSFERABLE TO ADDITIONAL INSTITUTIONS OR SUBSEQUENT OWNERS WITHOUT WRITTEN PERMISSION OF THE SURVEYOR.
4. THIS SURVEY IS VALID ONLY WHEN BEARING SEAL AND SIGNATURE OF SURVEYOR.
5. THIS SURVEY IS BASED ON FIELD WORK LAST PERFORMED BY HILGARTWILSON, LLC IN AUGUST, 2020. SITE CONDITIONS THAT MAY HAVE CHANGED SUBSEQUENT TO FIELD WORK WILL NOT BE REFLECTED HEREON.
6. THE INTENT OF THIS SURVEY IS NOT TO CREATE AN ILLEGAL LAND SPLIT PER THE APPLICABLE ARIZONA LAW AND/OR STATUTES.
7. THE POTENTIAL BUYER(S) OF THIS SITE IS HEREBY ADVISED THAT THIS SITE MAY BE SUBJECT TO ARIZONA PLATTING LAWS PRIOR TO THE DEVELOPMENT OF THIS SITE.
8. SITE ADDRESS IS UNASSIGNED AT THIS TIME. (TABLE A, ITEM #2)
9. THIS SURVEY IS LIMITED TO SURFACE AND ABOVE SURFACE OBSERVATIONS OF EXISTING UTILITIES. NO UNDERGROUND UTILITY INFORMATION IS SHOWN HEREON. (TABLE A, ITEM #11)
10. THERE IS EVIDENCE OF RECENT EARTH MOVING WORK, BUILDING CONSTRUCTION OR BUILDING ADDITIONS OBSERVED IN THE PROCESS OF CONDUCTING THE FIELDWORK. (CONSTRUCTION OF LOOP 202 WITHIN THE PROPERTY)(TABLE A, ITEM #16)
11. THERE IS AN APPROXIMATE CENTERLINE OF OPEN SPACE THROUGH PARCEL 1, 2 & 3 PER BOOK 1002, PAGE 50, M.C.R. ALSO BEING SCHEDULE B ITEM #9, SHOWN ON SHEET 2 & 3 OF THIS SURVEY.
12. NO TOPOGRAPHIC INFORMATION WAS COLLECTED OR SHOWN SOUTH OF LOOP 202 DUE TO LACK OF ACCESS AND CONSTRUCTION ACTIVITY.

SURVEYOR'S CERTIFICATION:

TO:
1. ARIZONA STATE LAND DEPARTMENT
2. FIDELITY NATIONAL TITLE INSURANCE COMPANY

THIS IS TO CERTIFY THAT THIS MAP OR PLAT AND THE SURVEY ON WHICH IT IS BASED WERE MADE IN ACCORDANCE WITH THE 2016 MINIMUM STANDARD DETAIL REQUIREMENTS FOR A.L.T.A./N.S.P.S. LAND TITLE SURVEYS, JOINTLY ESTABLISHED AND ADOPTED BY ALTA AND NSPS, AND INCLUDES ITEMS 1, 2, 3, 4, 8, 11, 16, and 21 OF TABLE A THEREOF. THE FIELDWORK WAS COMPLETED IN AUGUST, 2020.

JOHN W. MARSHALL
RLS# 53151
HILGARTWILSON, LLC
2141 E. HIGHLAND AVE., STE. 250
PHOENIX, ARIZONA 85016
P: 602.490.0535
jmarshall@hilgartwilson.com

REGISTERED LAND SURVEYOR CERTIFICATE NO. 53151 JOHN W. MARSHALL Date Signed 9/11/20 ARIZONA, U.S.A.

NOTE:
A.R.S. 32-151 STATES THAT THE USE OF THE WORD "CERTIFY" OR "CERTIFICATION" BY A PERSON OR FIRM THAT IS REGISTERED OR CERTIFIED BY THE BOARD IS AN EXPRESSION OF PROFESSIONAL OPINION REGARDING FACTS OR FINDINGS THAT ARE SUBJECT OF THE CERTIFICATION AND DOES NOT CONSTITUTE AN EXPRESS OR IMPLIED WARRANTY OR GUARANTEE.

REV.:

HILGARTWILSON
ENGINEER | PLAN | SURVEY | MANAGE
2141 E. HIGHLAND AVE., STE. 250 | P: 602.490.0535 / F: 602.368.2436
PHOENIX, AZ 85016 | www.hilgartwilson.com

SOUTH MOUNTAIN 370
19TH AVENUE & LOOP 202
PHOENIX, ARIZONA

A.L.T.A./N.S.P.S. LAND TITLE SURVEY

HILGARTWILSON
PROJ NO.: 2207
DATE: SEPT. 2020
SCALE: N.T.S.
DRAWN: JDL
DESIGNED: HW
APPROVED: JWM

DWG. NO.
SV-1
SHT. 1 OF 3

U:\2200\2207\SURVEY\ALTA\2207-ALTA-SURVEY.dwg 9/11/2020 4:28 PM

© Copyright 2020, HILGARTWILSON, LLC – This plan document set is the sole property of HILGARTWILSON, LLC. No alterations to these plans, other than adding "as-built" information, are allowed by anyone other than authorized HILGARTWILSON, LLC employees.

15-2E-36 53-121529

SEE SHEET 3

WEST QUARTER CORNER
SECTION 36, T1S, R2E
FOUND 2" ALUMINUM CAP
STAMPED SCI, S35, S36,
RLS 21780, DATED 2000

FOOTHILLS RESERVE
PARCEL A-2
BK. 549, PG. 49, M.C.R.

AMENDED STATE PLAT NO. 30
SOUTH MOUNTAIN 620
PARCEL 6
BK. 1002, PG. 50, M.C.R.

SEE DETAIL "D" SHEET 3

FOUND 3" CITY OF PHOENIX BRASS CAP FLUSH STAMPED 39131 DATED 2017

R=3885.44'
D=15°01'24"
L=1018.78'

8' SRP ELECTRIC EASEMENT (12)

100' PROPOSED R/W (9)

N61°09'11"E
1346.50'

CHANDLER BOULEVARD

21' ROADWAY & UTILITY EASEMENT (17)

DRAINAGE EASEMENT (11)

HEAD WALL W/ (2) 24" RCP

VERTICAL CURB & GUTTER W/ 5' ATTACHED SIDEWALK

5' SRP ELECTRIC EASEMENT (7)
50' ROADWAY & UTILITY EASEMENT (5) (8) (18)

EDGE OF PAVEMENT

SEE DETAIL "C" SHEET 2

8' SRP ELECTRIC EASEMENT (12)

FOUND 3" CITY OF PHOENIX BRASS CAP FLUSH STAMPED 39131 DATED 2017

70' PROPOSED R/W (9)

APPROXIMATE CENTERLINE LOCATION OF OPEN SPACE (NO WIDTH GIVEN)

PARCEL 1
BOOK 1002, PAGE 50,
M.C.R.

BLOCK WALL ENDS 0.5' EAST OF THE PROPERTY LINE

FOUND REBAR W/ TAG, "38862, SCI" WITNESS CORNER BARRICADE IS 3.0' EAST OF THE PROPERTY LINE

BLOCK WALL CORNER IS 0.3' EAST OF THE PROPERTY LINE

"PARCEL 23 AT FOOTHILLS CLUB WEST"
BK. 469, PG. 39, M.C.R.

GLENHAVEN DRIVE

6' DIRT ROAD

BLOCK WALL CORNER IS 0.6' EAST OF THE PROPERTY LINE

2' TALL LANDSCAPE RETAINING WALL IS 0.6' EAST OF THE PROPERTY LINE

70' PROPOSED R/W (9)

FOUND P.K. NAIL W/ TAG, 22768, ACCEPTED AS PARCEL CORNER

LIBERTY LANE

FOUND P.K. NAIL W/ TAG, 27239, 0.6' SOUTH OF PARCEL CORNER ACCEPTED AS CENTERLINE MONUMENT

S00°07'15"W 1846.38'
S00°07'15"W 2462.04'

FOOTHILLS CLUB WEST
PARCEL 24
BK. 1188, PG. 14, M.C.R.

FOUND 3-1/4" ADOT ROW ALUMINUM CAP, STAMPED 10596, 2396+21.60, RLS 25396, DATED 2020

FENCE CORNER IS 1.2' SOUTH & 0.6' WEST OF THE PROPERTY CORNER

FOUND 3-1/4" ADOT ROW ALUMINUM CAP, STAMPED 40010, 2396+22.28, RLS 25396, DATED 2020
20.7' SOUTH OF PROPERTY CORNER

SHAUGHNESSEY ROAD

SEE DETAIL "A" SHEET 2

N00°07'00"E
2639.07'
822.94'

S89°52'07"E
142.66'

R=1226.00'
D=28°58'42"
L=620.07'

8' SRP ELECTRIC EASEMENT (12)

HEAD WALL W/ 24" RCP

DRAINAGE EASEMENT (11)

8' SRP ELECTRIC EASEMENT (12)

CHANDLER BOULEVARD

50' PROPOSED R/W (9)

COTTONWOOD LANE

FOUND 3" CITY OF PHOENIX BRASS CAP FLUSH

FOOTHILLS RESERVE
PARCEL D
BK. 569, PG. 39, M.C.R.

N00°07'00"E
1357.89'

26' SEWER EASEMENT (21) (22)

58' T.C.E. (19)

FOUND REBAR W/ NO I.D.

FENCE IS 0.1' SOUTH OF THE PROPERTY CORNER

348.23'

110' ROADWAY & UTILITY EASEMENT (18) (8) (5)

LOOP 202 (2) (19)

10' ELECTRIC EASEMENT (16)

N00°07'00"E
109.92'

20' SEWER EASEMENT (4) (17)

SOUTHWEST CORNER
SECTION 36, T1S, R2E
FOUND 2" MARICOPA COUNTY ALUMINUM CAP, STAMPED T1S, R2E, S35, S36, GRIR, 29891, DATED 2003

COMMON CLOSING CORNER
SECTIONS 1 & 2, T2S, R3E
FOUND 3" G.L.O. BRASS CAP STAMPED T2S, R3E, S2, CC, S1 GRIR, DATED 1911

26' SEWER EASEMENT (21) (22)

20' T.C.E. (21)

10' GAS EASEMENT (20)

S88°50'04"W
2561.13'

N89°37'59"E 2558.97'

100' ELECTRIC EASEMENT (15)

S89°46'16"W 2558.38'

PARCEL 2
BOOK 1002, PAGE 50,
M.C.R.

47.40 AC.

11.70 AC.

FENCE IS 1.1' SOUTH OF PROPERTY LINE

FOUND 3-1/4" ADOT ROW ALUMINUM CAP, STAMPED 10598, 2421+84.41, RLS 25396, DATED 2020

FOUND 3-1/4" ADOT ROW ALUMINUM CAP, STAMPED 11014, 2421+92.46, RLS 25396, DATED 2020

N89°37'59"E
51.80'

S00°22'01"E
23.57'

SOUTH QUARTER CORNER
SECTION 36, T1S, R2E
FOUND 2" MARICOPA COUNTY ALUMINUM CAP, STAMPED T1S, R2E, S1/4, S16, GRIR 29891, DATED 2003

S88°50'04"W
1871.15'

20' SEWER EASEMENT (4) (17)

CENTERLINE LOCATION OF OPEN SPACE (NO WIDTH GIVEN)

PARCEL 2
BOOK 1002, PAGE 50,
M.C.R.

PARCEL 3
BOOK 1002, PAGE 50,
M.C.R.

FOUND 3-1/4" ADOT ROW ALUMINUM CAP, STAMPED 10597, 2403+04.45, RLS 25396, DATED 2020

FENCE CORNER IS 1.1' SOUTH OF PROPERTY CORNER

10' GAS EASEMENT (20)

26' SEWER EASEMENT (22) (21)

20' T.C.E. (21)

110' ROADWAY & UTILITY EASEMENT (18) (8) (5)

LOOP 202 (2) (19)
(16-118553)

10' ELECTRIC EASEMENT (16)

N89°55'02"E 2334.27'

S89°46'05"W 2558.27'

100' ELECTRIC EASEMENT (15)

PARCEL 3
BOOK 1002, PAGE 50,
M.C.R.

PARCEL 4
BOOK 1002, PAGE 50,
M.C.R.

6' DIRT ROAD

PARCEL 5
BOOK 1002, PAGE 50,
M.C.R.

S82°41'49"W
691.22'

R=12055.00'
D=0°48'54"
L=171.45'

531.45'

N00°57'07"E
RADIAL

S00°07'15"W 84.23'

PARCEL 5
BOOK 1002, PAGE 50,
M.C.R.

SOUTHEAST CORNER
SECTION 36, T1S, R2E
FOUND 2" MARICOPA COUNTY ALUMINUM CAP, STAMPED T1S, R2E, S36, R3E, S31 GRIR, 29891, DATED 2003

SURVEY ACCEPTABLE
JPN 9/18/2020

13 5A-98

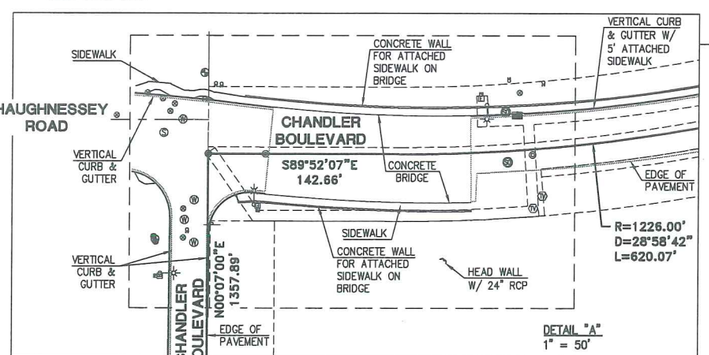

DETAIL "A"
1" = 50'

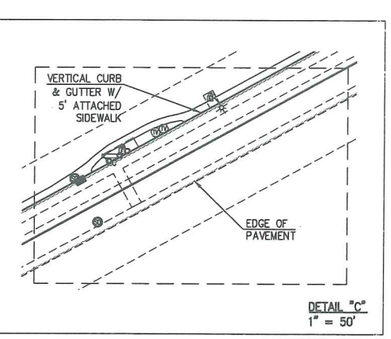

DETAIL "C"
1" = 50'

LEGEND

	FOUND MONUMENT AS NOTED		WATER STUB OUT
	FOUND 3" CITY OF PHOENIX BRASS CAP FLUSH OR AS NOTED		CP TEST STATION
	SET 1/2" REBAR W/ CAP, RLS 53151 OR AS NOTED		GAS VALVE
	ELECTRIC TRANSFORMER		GAS MARKER
	ELECTRIC PULL BOX		SANITARY SEWER MANHOLE
	LIGHT POLE W/ARM		SEWER CLEAN OUT
	ELECTRIC CABINET		BOUNDARY LINE
	SIGN		EASEMENT LINE
	BOLLARD		SECTION LINE
	PVC RISER		PARCEL LINE
	TELEPHONE PEDESTAL		BARB WIRE FENCE
	CABLE TV PULL BOX		BLOCK WALL
	CURB INLET	T.C.E.	TEMPORARY CONSTRUCTION EASEMENT
	STORM DRAIN MANHOLE	RCP	REINFORCED CONCRETE PIPE
	FIRE HYDRANT	M.C.R.	MARICOPA COUNTY RECORDS
	WATER VALVE	RLS	REGISTERED LAND SURVEYOR
	WATER MANHOLE	ADOT	ARIZONA DEPARTMENT OF TRANSPORTATION

N

200 100 0 200 400
SCALE: 1" = 200 FEET

© Copyright 2020, HILGARTWILSON, LLC – This plan document set is the sole property of HILGARTWILSON, LLC. No alterations to these plans, other than adding "as-built" information, are allowed by anyone other than authorized HILGARTWILSON, LLC employees.

REV.:

HILGARTWILSON
ENGINEER | PLAN | SURVEY | MANAGE
2141 E. HIGHLAND AVE., STE. 250
PHOENIX, AZ 85016
P: 602.490.0535 / F: 602.368.2436
www.hilgartwilson.com

REGISTERED LAND SURVEYOR
CERTIFICATE NO. 53151
JOHN W. MARSHALL
Date Signed 09-18-20
ARIZONA, U.S.A.

SOUTH MOUNTAIN 370

19TH AVENUE & LOOP 202
PHOENIX, ARIZONA

A.L.T.A./N.S.P.S. LAND TITLE SURVEY

HILGARTWILSON
PROJ NO.: 2207
DATE: SEPT. 2020
SCALE: AS SHOWN
DRAWN: JDL
DESIGNED: HW
APPROVED: JWM

DWG. NO.
SV-2

SHT. 2 OF 3

U:\2200\2207\SURVEY\ALTA\2207-ALTA-SURVEY.dwg 9/11/2020 4:32 PM

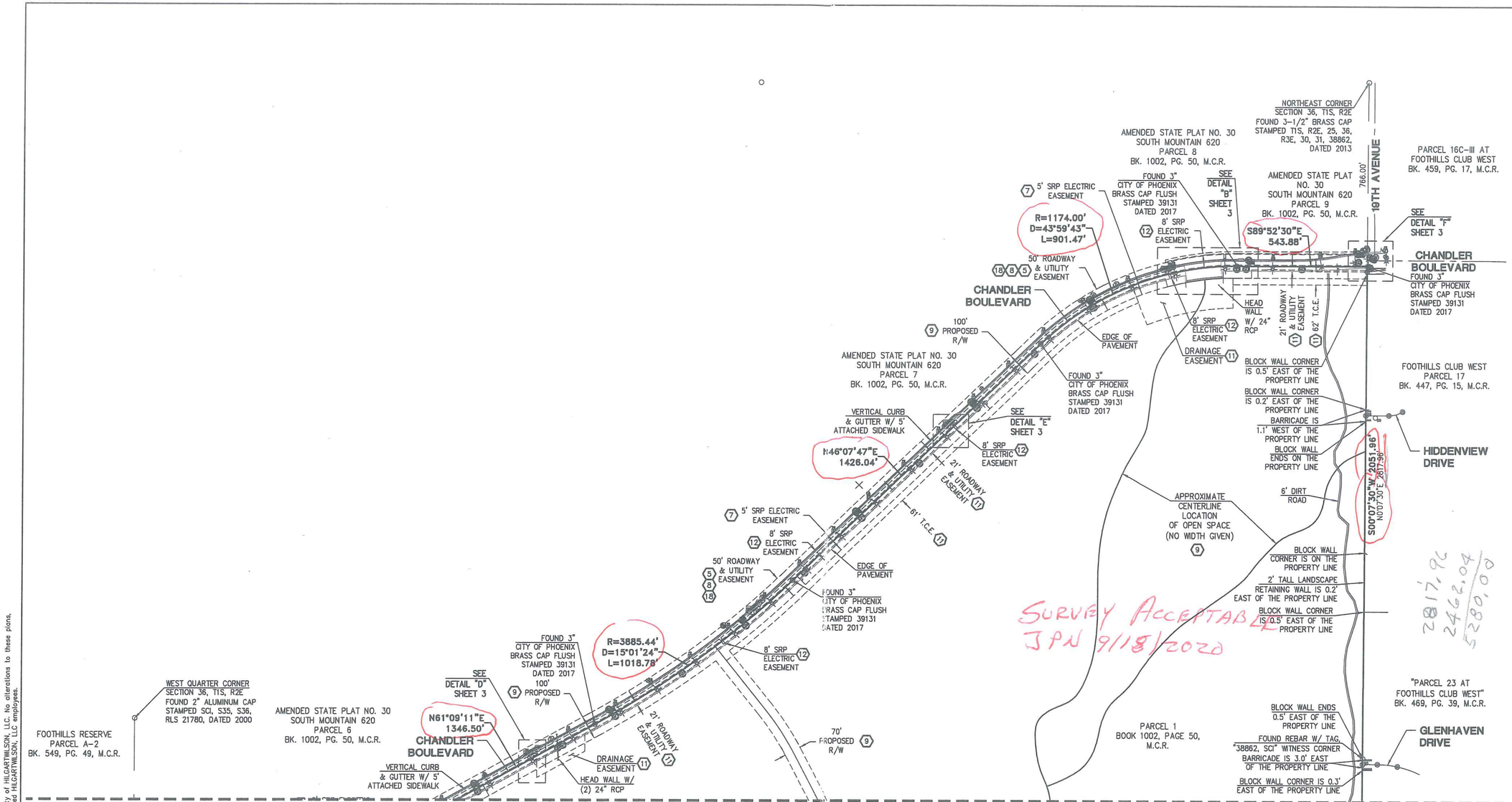

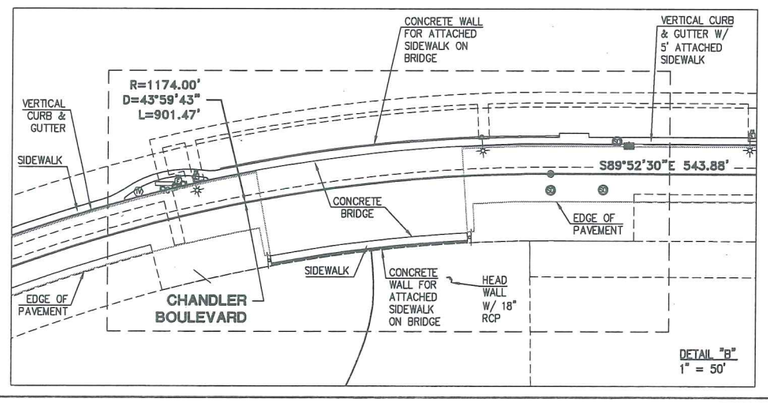

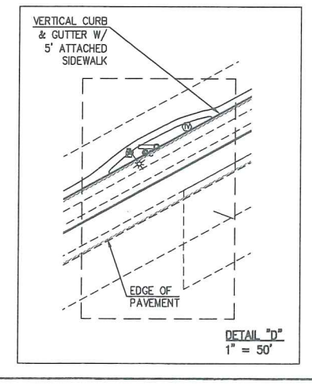

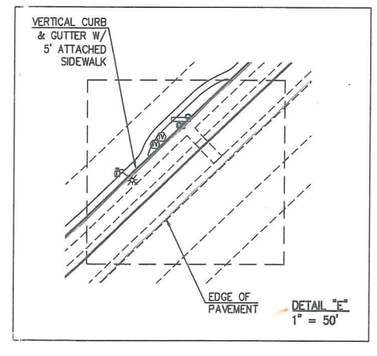

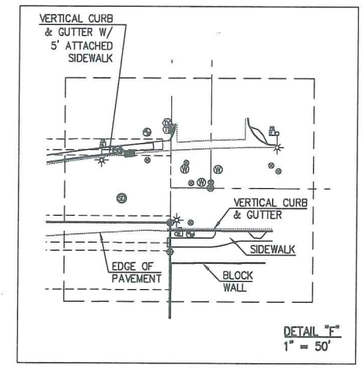

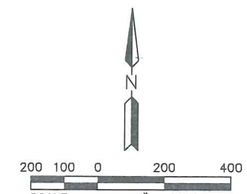

SEE SHEET 2
FOR LEGEND

© Copyright 2020, HILGARTWILSON, LLC – This plan document set is the sole property of HILGARTWILSON, LLC. No alterations to these plans, other than adding "as-built" information, are allowed by anyone other than authorized HILGARTWILSON, LLC employees.

REV.:

HILGARTWILSON
ENGINEER | PLAN | SURVEY | MANAGE
2141 E. HIGHLAND AVE., STE. 250
PHOENIX, AZ 85016
P: 602.490.0535 / F: 602.368.2436
www.hilgartwilson.com

REGISTERED LAND SURVEYOR
CERTIFICATE NO.
53151
JOHN W.
MARSHALL
Date Signed 09-11-20
ARIZONA U.S.A.

SOUTH MOUNTAIN 370

19TH AVENUE & LOOP 202
PHOENIX, ARIZONA

A.L.T.A./N.S.P.S. LAND TITLE SURVEY

HILGARTWILSON

PROJ NO.:	2207
DATE:	SEPT. 2020
SCALE:	AS SHOWN
DRAWN:	JDL
DESIGNED:	HW
APPROVED:	JWM

DWG. NO.
SV-3

SHT. 3 OF 3

U:\2200\2207\SURVEY\ALTA\2207-ALTA-SURVEY.dwg 9/11/2020 4:32 PM